Blancett®
Turbine Flow Meters

Digital Flow Monitor

B3000

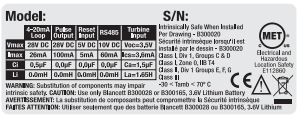

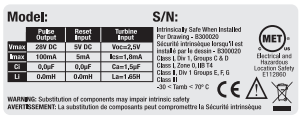

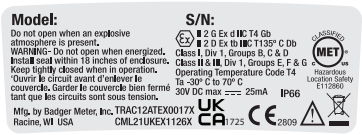

Badger Meter

DSY-PM-00022-EN-22 (August 2021)

User Manual

CONTENTS

Scope of This Manual 4
Unpacking and Inspection 4
Safety 4
Terminology and Symbols 4
Considerations 4
Electrical Symbols 5
Introduction 5
Installation. 6
Connecting the B3000 to a Frequency Output Device 6
Power Connections 8
Standard 8
Solar. 9
Operating the Monitor 10
Programming Mode. 10
Programming Using Frequency Output Turbine Flow Meters. 11
Menu Structure 13
Liquid 13
Advanced I/O Liquid. 15
Gas. 17
Advanced I/O Gas 19
Liquid (Solar Powered) 21
Gas (Solar Powered) 23
Programming 25
Saving Programmed Parameters 25
Liquid 25
Gas. 39
Save Settings and Return to Run Mode. 39

Troubleshooting Guide 40
Default K-Factor Values 40
Battery Replacement (B30A/B/X/Z only) 41
NEMA 4X Enclosure 41
Explosion-Proof Enclosure 42
K-Factors Explained 43
Calculating K-factors 43
Declaration of Conformity 45
Explosion-Proof Enclosure 46
Installation 46
Modbus Interface 49
Modbus Register / Word Ordering 50
Specifications 52
Part Number Construction 53
Dimensions 54
Meter Mount 54
Remote Mount 54
Explosion-proof 54
Swivel Mount 55

SCOPE OF THIS MANUAL

This manual is intended to help you get the B3000 flow monitor up and running quickly.

IMPORTANT

Read this manual carefully before attempting any installation or operation. Keep the manual accessible for future reference.

UNPACKING AND INSPECTION

Upon opening the shipping container, visually inspect the product and applicable accessories for any physical damage such as scratches, loose or broken parts, or any other sign of damage that may have occurred during shipment.

NOTE: If damage is found, request an inspection by the carrier's agent within 48 hours of delivery and file a claim with the carrier. A claim for equipment damage in transit is the sole responsibility of the purchaser.

SAFETY

Terminology and Symbols

⚠ DANGER Indicates a hazardous situation, which, if not avoided, will result in death or serious personal injury.

⚠ WARNING Indicates a hazardous situation, which, if not avoided, could result in death or serious personal injury.

⚠ CAUTION Indicates a hazardous situation, which, if not avoided, could result in minor or moderate personal injury or damage to property.

Considerations

The installation of the B3000 flow monitor must comply with all applicable federal, state, and local rules, regulations, and codes.

⚠ WARNING

EXPLOSION HAZARD - SUBSTITUTION OF COMPONENTS MAY IMPAIR SUITABILITY FOR CLASS I, DIVISION 2.

⚠ AVERTISSEMENT

RISQUE D'EXPLOSION - LA SUBSTITUTION DE COMPOSANTS PEUT RENDRE CEMATÉRIEL INACCCEPTABLE POUR LES EMPLACEMENTS DE CLASSE I, DIVISION 2.

⚠ WARNING

DO NOT CONNECT OR DISCONNECT EITHER POWER OR OUTPUTS UNLESS THE AREA IS KNOWN TO BE NON-HAZARDOUS.

⚠ AVERTISSEMENT

RISQUE D'EXPLOSION. NE PAS DÉBRANCHER TANT QUE LE CIRCUIT EST SOUSTENSION, À MOINS QU'LL NE S'AGISSE D'UN EMPLACEMENT NON DANGEREUX.

IMPORTANT

Not following instructions properly may impair safety of equipment and/or personnel.

Electrical Symbols

Function	Direct Current	Alternating Current	Earth (Ground)	Protective Ground	Chassis Ground
Symbol					

INTRODUCTION

The B3000 flow monitor incorporates state-of-the-art, digital signal processing technology, designed to provide exceptional flexibility at a very affordable price. Though designed for use with Blancett flow sensors, this monitor can be used with almost any flow sensor producing a low amplitude AC output or contact closure signal.

Figure 1: B3000 Flow monitor (NEMA 4X)

Figure 2: B3000 Flow monitor (Ex-Proof)

This monitor can accept low-level frequency input signals typically found in turbine flow sensors. The output signal for these types of sensors is a frequency proportional to the rate of flow. The B3000 monitor uses the frequency information to calculate flow rate and total flow. Through the use of the programming buttons, you can select rate units, total units and unit time intervals among other functions. If required, the monitor can easily be re-configured in the field. Finally, you can choose between simultaneously showing rate and total, or alternating between rate and grand total.

The monitor is available in two different levels of functionality and two packaging options. The base model provides all the functions necessary for the most common flow metering applications. The advanced version adds communications capabilities over an RS485 bus using Modbus RTU and control outputs. The B3000 monitor can be powered using loop, battery or solar power.

Packaging options include a polycarbonate, NEMA 4X version and an aluminum explosion proof enclosure.

INSTALLATION

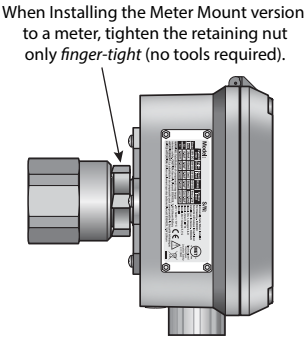

Figure 3: Meter mount retaining nut

Connecting the B3000 to a Frequency Output Device

Most turbine flow sensors produce a frequency output that is directly proportional to the volumetric flow through the sensor. There are, however, different output waveforms that can be presented to the display device depending on the transducer that converts the mechanical motion of the turbine into an electrical signal.

The B3000 monitor has two jumpers for setting the type of signal and the minimum amplitude of the signal that it accepts. First, establish the type of output provided by the flow sensor. The outputs almost always fall into one of two types.

- Type 1 is the unaltered frequency signal coming from an un-amplified magnetic pickup. This signal is normally a sine wave in appearance, and the amplitude of the waveform varies with the flow. Small turbines have comparatively small rotating masses so they produce a smaller amplitude waveform and higher frequencies than larger turbine sensors.
- Type 2 is the frequency signal from the transducer is amplified, wave shaped or both, to produce a waveform of a specified type and amplitude. Most amplified transducers output a square wave shape at one of many standard amplitudes. For example a popular amplified output is a 10V DC square wave.

If the flow sensors output signal is type 1, you must also determine the minimum amplitude of the frequency output. The B3000 monitor has a high or low signal sensitivity setting. Use the high signal sensitivity (30 mV) with low amplitude (usually small) turbine flow sensors. Use the low signal sensitivity setting (60 mV) for larger turbines and amplified transducers (see *Figure 4* and *Figure 5*).

Use the high signal sensitivity setting where the minimum signal amplitude is below 60 mV. Setting the sensitivity lower than necessary may allow noise interference.

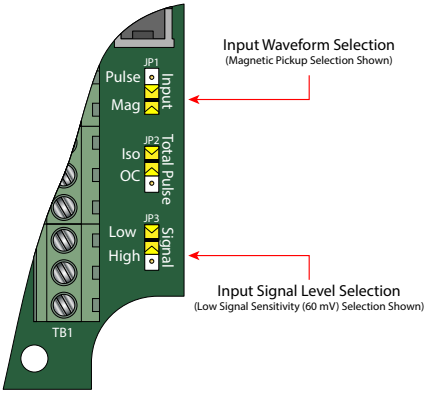

Figure 4: Input jumper settings (NEMA 4X)

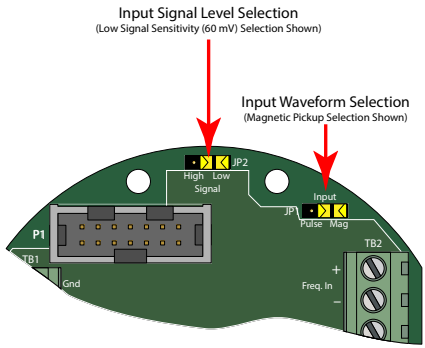

Figure 5: Input jumper settings (Ex-Proof)

When the type of waveform and input signal level (amplitude) are determined, set the jumpers on the B3000 monitor circuit board.

For typical variable reluctance magnetic pickups, set the waveform selection jumper for Mag. Determine the setting for the input level by looking at the magnetic pickup specifications. If the minimum amplitude at the minimum rated flow is greater than 60 mV, use the low signal sensitivity jumper position (see *Figure 4 on page 7* and *Figure 5 on page 7*).

If the minimum signal level is below 60 mV, use the high signal sensitivity jumper position.

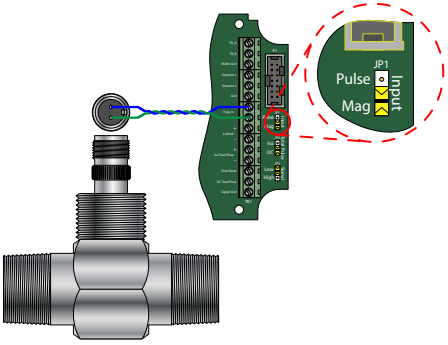

Figure 6: Typical magnetic pickup connection (NEMA 4X)

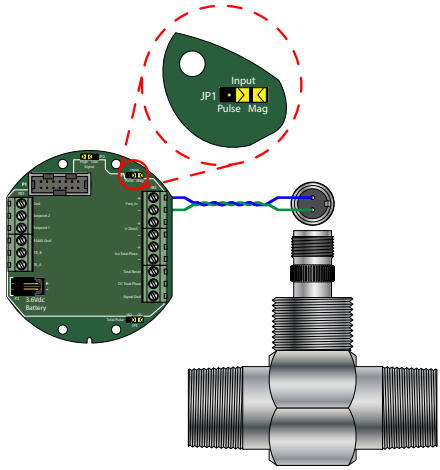

Figure 7: Typical magnetic pickup connection (Ex-Proof)

For amplified input signals the input jumper should be set to Pulse and the signal jumper set to Low (see *Figure 8* and *Figure 9*).

NOTE: Amplified magnetic pickups require an external power source. The B3000 does not supply power to an amplified pickup.

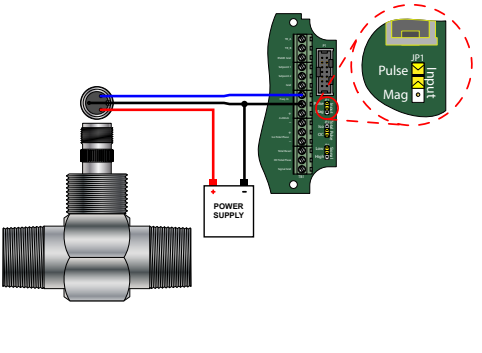

Figure 8: Typical amplified pickup connection (NEMA 4X)

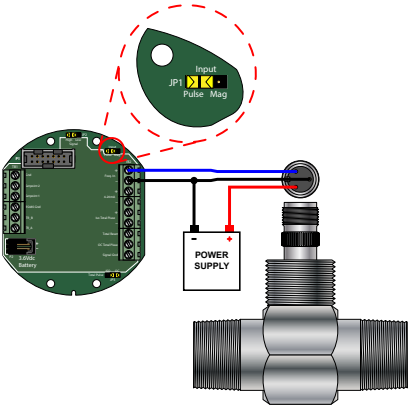

Figure 9: Typical amplified pickup connection (Ex-Proof)

POWER CONNECTIONS

Standard

The power supply used in the B30A/B/X/Z is an internal lithium 3.6V DC D cell that will power the monitor for about six years when no outputs are used. The monitor can also get power from a 4…20 mA current loop (see *Figure 10* and *Figure 11*). If the current loop is used, a sensing circuit within the monitor detects the presence of the current loop and disconnects the battery from the circuit. The B30S uses solar power only.

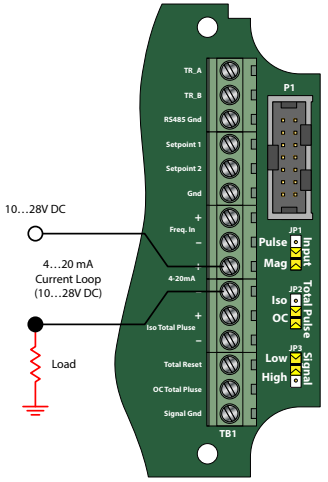

Figure 10: Loop power connections (NEMA 4X)

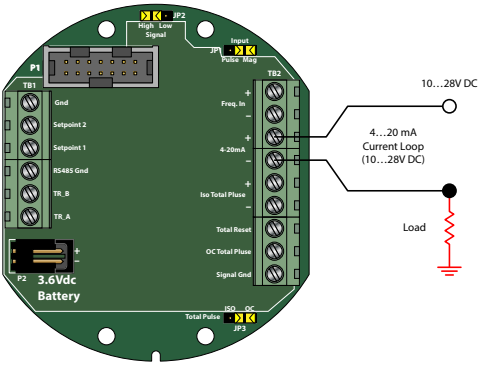

Figure 11: Loop power connections (Ex-Proof)

⚠CAUTION

GROUNDING FOR THE EXPLOSION PROOF ENCLOSURE IS NECESSARY. THE EXPLOSION PROOF ENCLOSURE IS PROVIDED WITH A GROUNDING SCREW ON THE INSIDE OF THE ENCLOSURE. THE CONDUCTOR USED FOR GROUNDING MUST BE OF A WIRE GAGE EQUAL TO OR GREATER THAN THE SIGNAL WIRES BEING USED. SEE FIGURE 12.

The explosion proof enclosure is provided with a grounding screw on the inside of the enclosure. The conductor used for grounding must be of a wire gage equal to or greater than the signal wires being used.

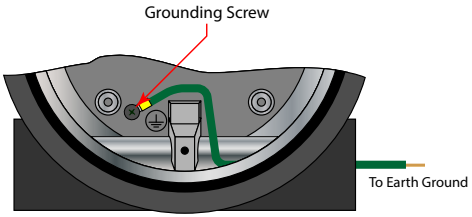

Figure 12: Required grounding for Ex-proof enclosure

Solar

A solar cell mounted on the top of the monitor in the B30S charges an internal 3.6V DC nickel-cadmium battery that powers the monitor. A fully charged battery powers the monitor for approximately 30 days. The solar powered B3000 has a single totalizing pulse output and cannot be powered by a 4…20 mA loop.

Figure 13: Solar powered B3000

OPERATING THE MONITOR

The monitor has three modes of operation referred to as the *Run*, *Programming*, and *Extended Programming* modes.

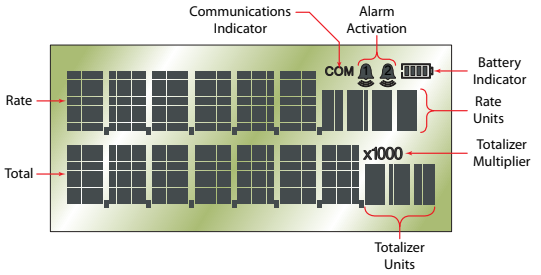

Figure 14: Display annunciators

To access the *Programming* mode, momentarily press and then release **MENU** until the first programming screen displays. The *Extended Programming* mode is entered by pressing and holding **MENU** until the first programming option appears. After programming the display with the necessary information, a lock out feature is available to prevent unauthorized access or changing of the meter's setup parameters.

Programming Mode

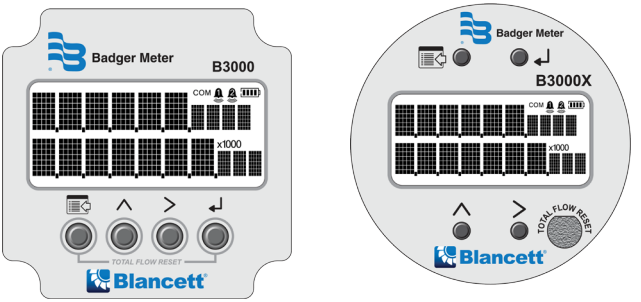

Figure 15: Keypad detail

Buttons

MENU	Switches to *Program* mode, press and hold for three seconds to enter *Extended Programming* mode, saves programming information and is used in reset process
UP	Scrolls backward through the parameter options and increments numeric variables
RIGHT	Scrolls forward through the parameter options and moves the active digit to the right
ENTER	Advances to the next programming parameter and is used in the reset process
TOTAL FLOW RESET	Explosion-proof only—allows the total to be reset without opening up the case **NOTE:** The functionality can be enabled or disabled through the *Extended Programming* menu item *RST Key*. The factory default is *Disabled*.

Special Functions

MENU + ENTER – Simultaneously press and hold to reset the current totalizer.

MENU – Press and hold menu for three seconds to enter extended programming mode.

UP + Right – Simultaneously press and hold to show the firmware version number, then the grand total.

UP – In run mode increases display contrast.

RIGHT – In run mode decreases display contrast.

Explosion-Proof Models Only

Explosion-proof models are equipped with a through-the-glass total reset function. This function allows the user to reset the monitor without removing the front cover. To enable this function, see *"Enable Reset Through the Glass (Explosion-Proof Models Only)" on page 32*.

To use this function, press and hold your finger to the glass of the monitor over the area marked *Total Flow Reset* for two seconds. When the monitor recognizes your finger is on the glass, the outline of the battery icon in the upper right corner of the screen disappears. When the monitor displays *Press to Reset*, remove your finger from the glass for one second, then place it back on the same area of glass for two seconds. The monitor flashes *Tot Rst*. The monitor displays 0 for the totals when the operation is complete. The timing of placing and removing your finger from the glass is an important part of this process. If the reset does not work the first time, try the operation again making sure that the timing is correct.

Modes

RUN – Normal operating mode.

PROGRAM – Used to program variables into the display.

EXTENDED PROGRAM – Used to program advanced variables into the display.

TEST – Used as a diagnostic tool to show input frequency and totalizer counts.

Programming Using Frequency Output Turbine Flow Meters

Each Blancett turbine flow meter is shipped with either a K-factor value or frequency data. If frequency data is provided, the data must be converted to a K-factor before programming the monitor. K-factor information, when supplied, can usually be found on the neck of the flow meter or stamped on the flow meter body. The K-factor represents the number of pulses per unit of volume (see *"K-Factors Explained" on page 43*). The K-factor is required to program the monitor.

Essentials

The B3000 monitor is engineered to provide several levels of programming tailored to the needs of the user. The first, or *Programming* level, provides access to the most commonly used setup parameters bypassing the more advanced settings. The first level programming is entered by pressing **MENU** for about one second.

The second level, or *Extended Programming* level, is accessed by pressing and holding **MENU** until the extended programming menu starts.

With the standard and solar models there is a third level. For the most basic unit setup choices the B3000 monitor employes a *Simple* and *Advanced* setup option accessed through the *Rate SU* parameter. If *Simple* is selected the rate and total choices are reduced to the five most common combinations avoiding the need to make unit and interval choices.

Liquid Meters	Standard	Solar	Advanced I/O
Basic Functions	Press **MENU** for about one second and then release.		
Extended Functions	Press and hold **MENU** until the extended programming menu starts.		
Simple Setup	Select *Rate SU* in the extended functions and choose *Simple*.		Not Applicable
Advanced Setup	Select *Rate SU* in the extended functions and choose *Advanced*.		

Table 1: Display mode selection information

Enter Programming Mode

The programming modes are accessed by pressing **MENU** for basic functions. Extended functions are accessed by pressing and holding **MENU** until the first programming parameter appears.

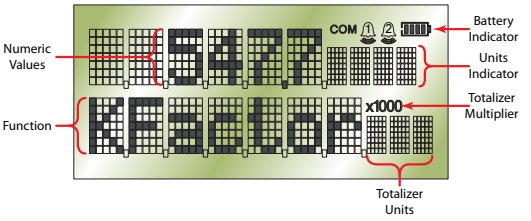

Figure 16: Programming mode display

MENU STRUCTURE

Liquid

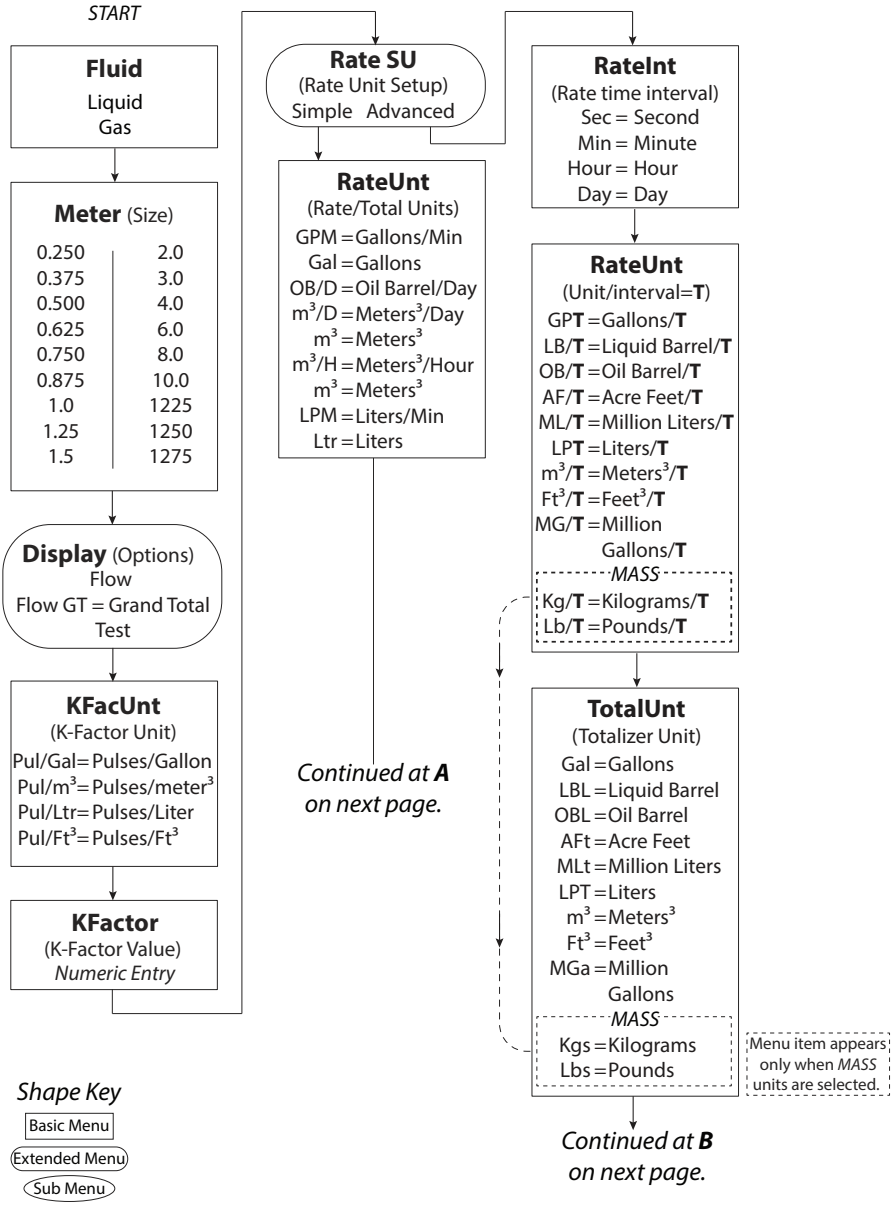

Liquid (continued)

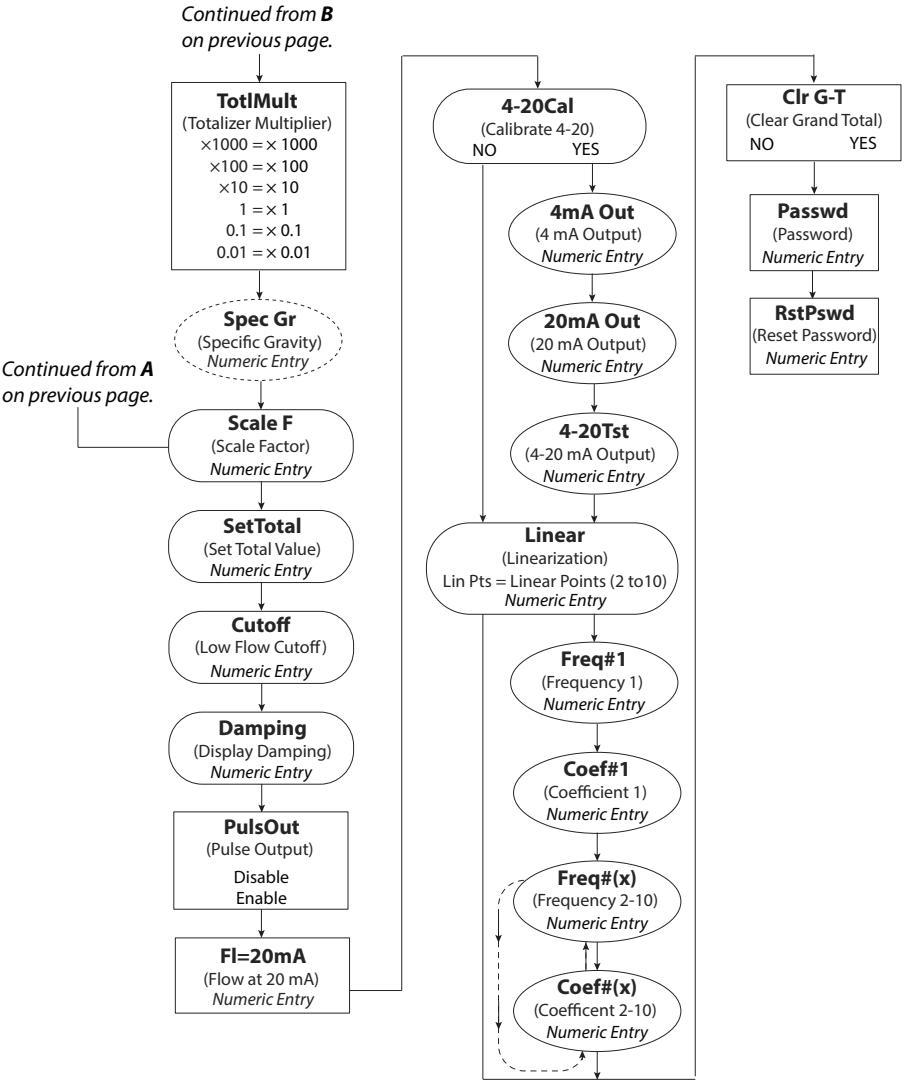

Advanced I/O Liquid

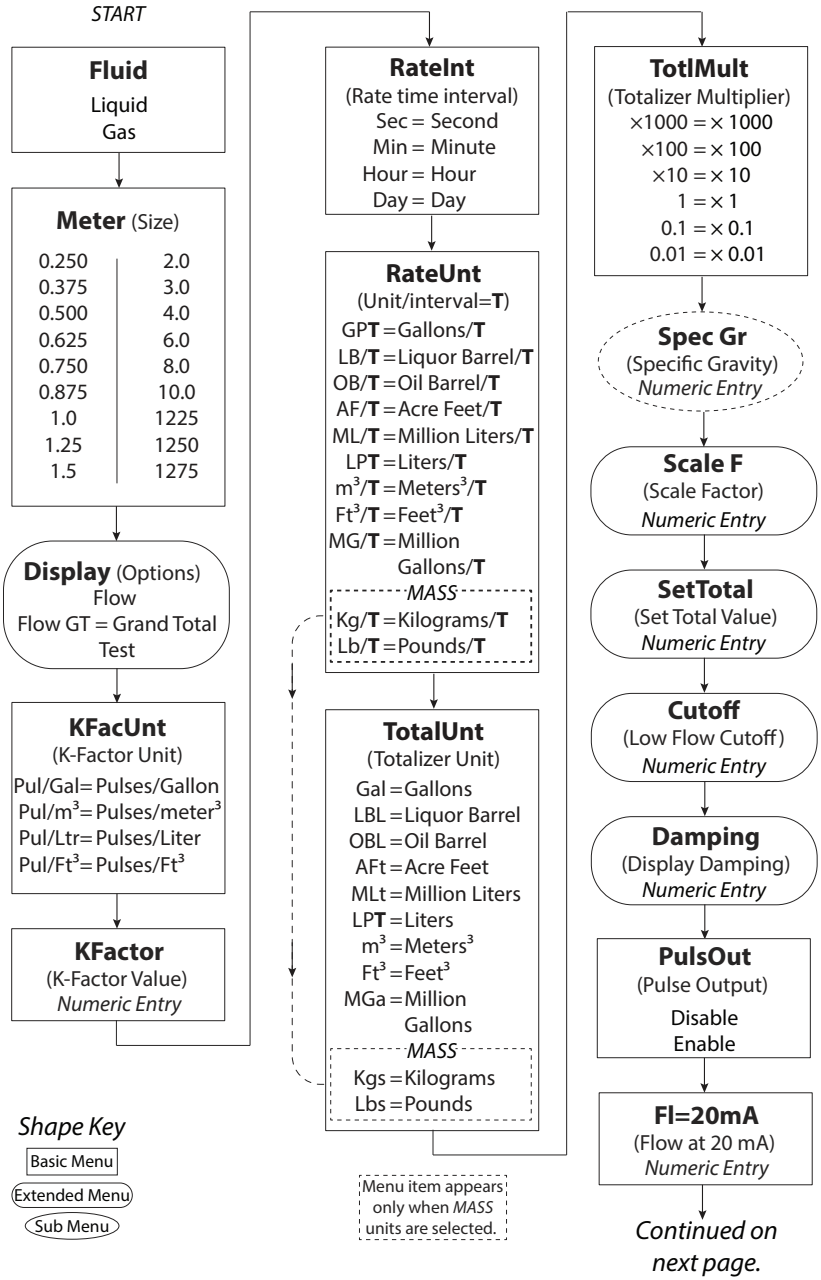

Advanced I/O Liquid (continued)

Continued from previous page.

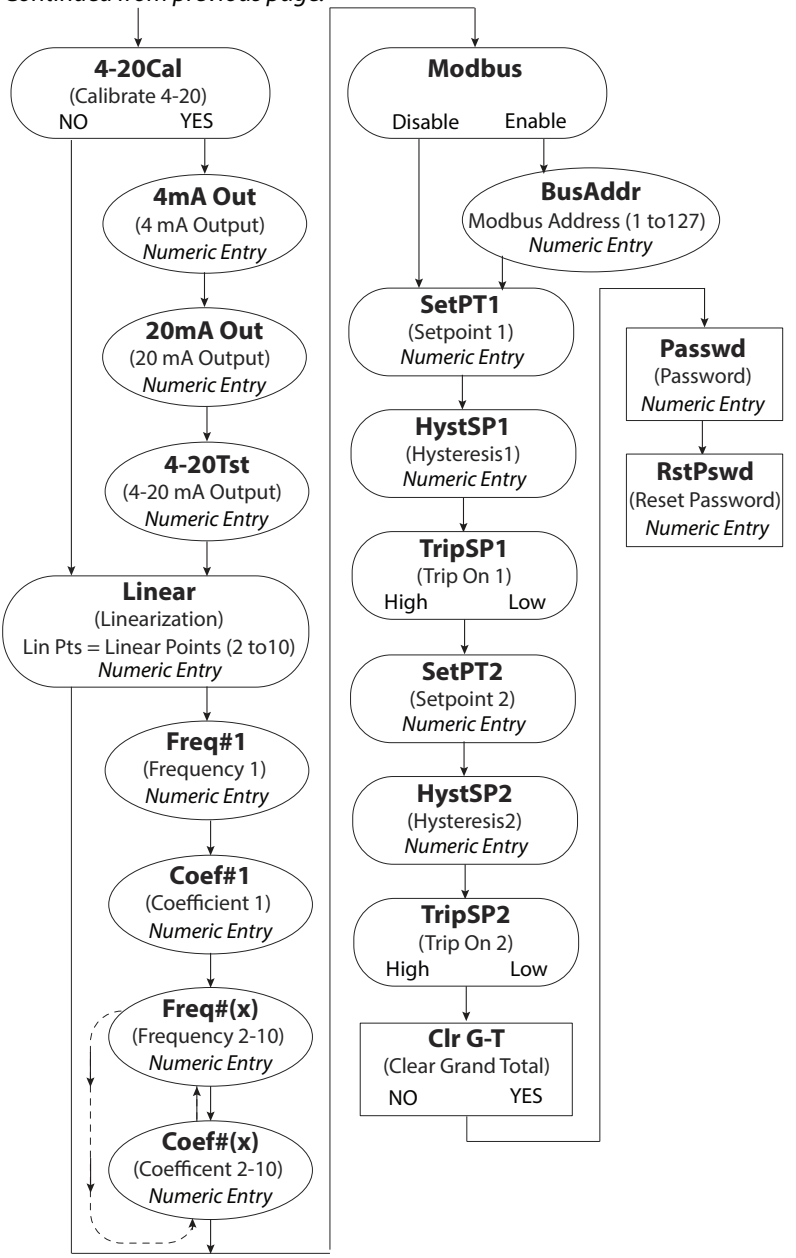

Gas

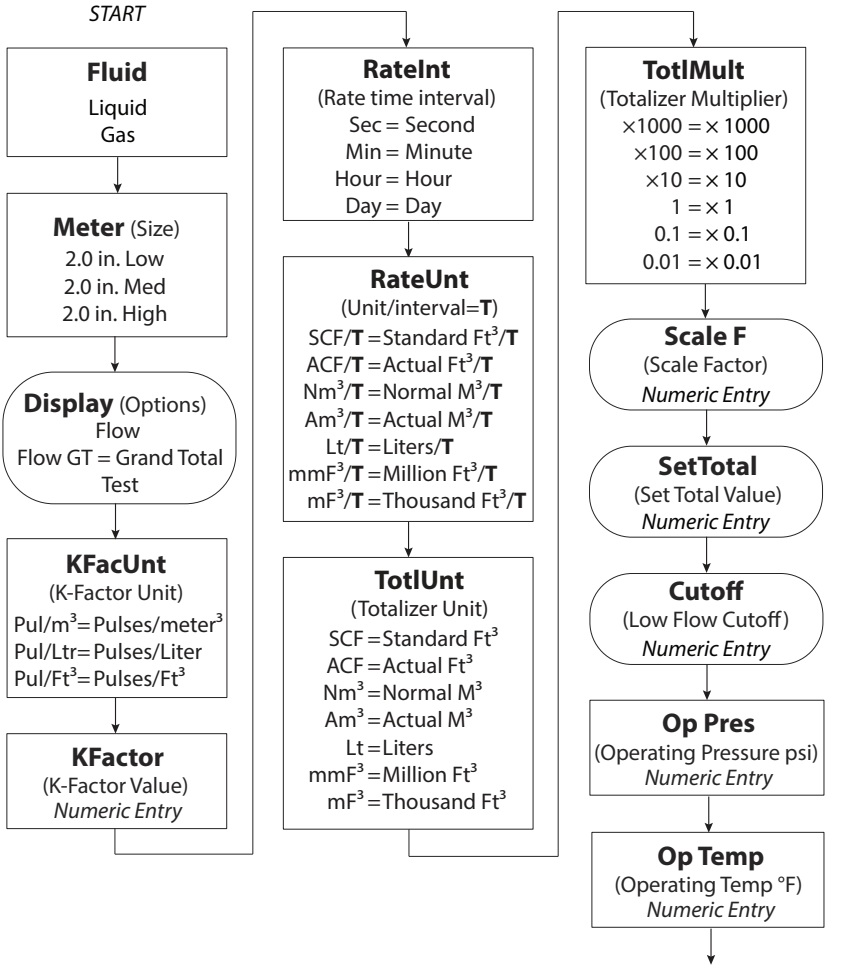

Continued on next page.

Shape Key

Basic Menu

Extended Menu

Sub Menu

Gas (continued)

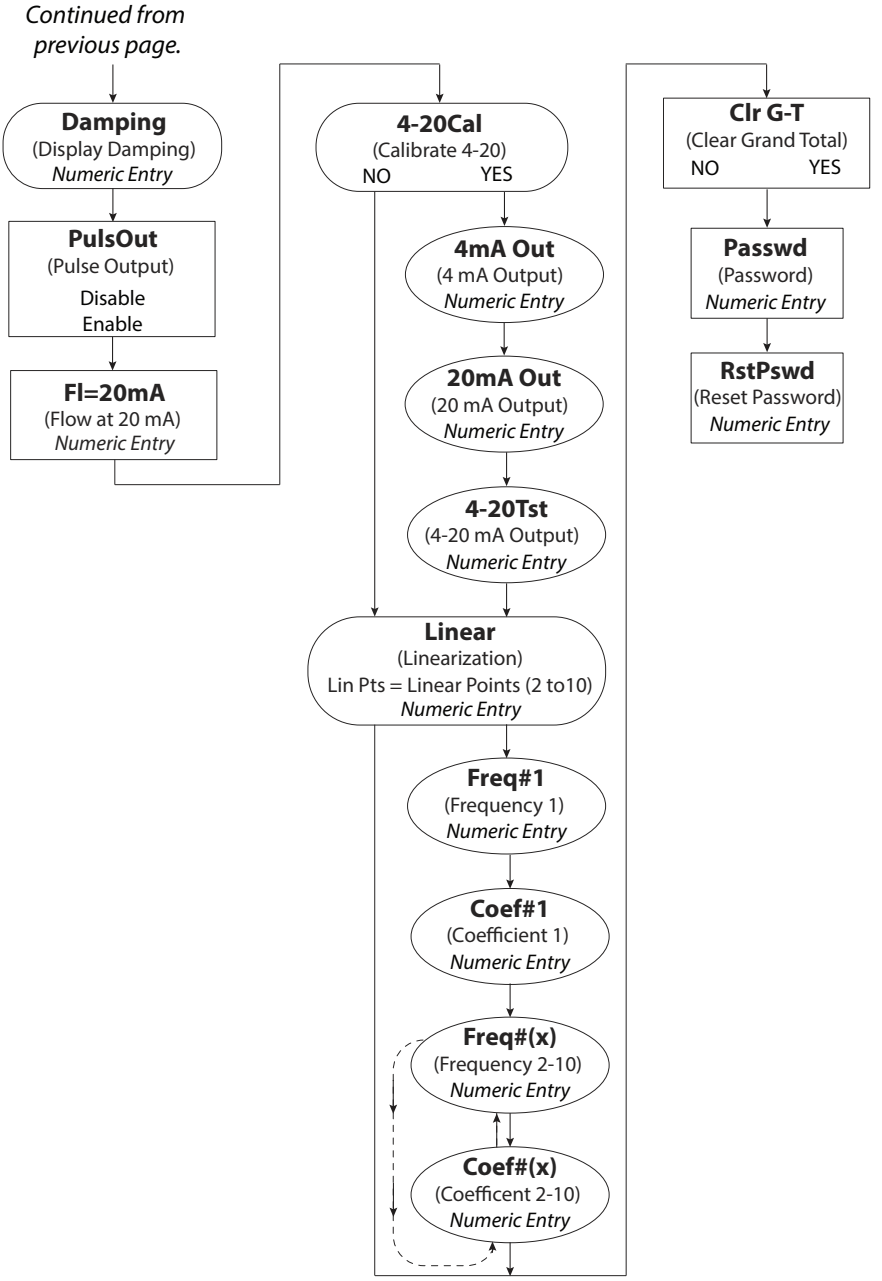

Advanced I/O Gas

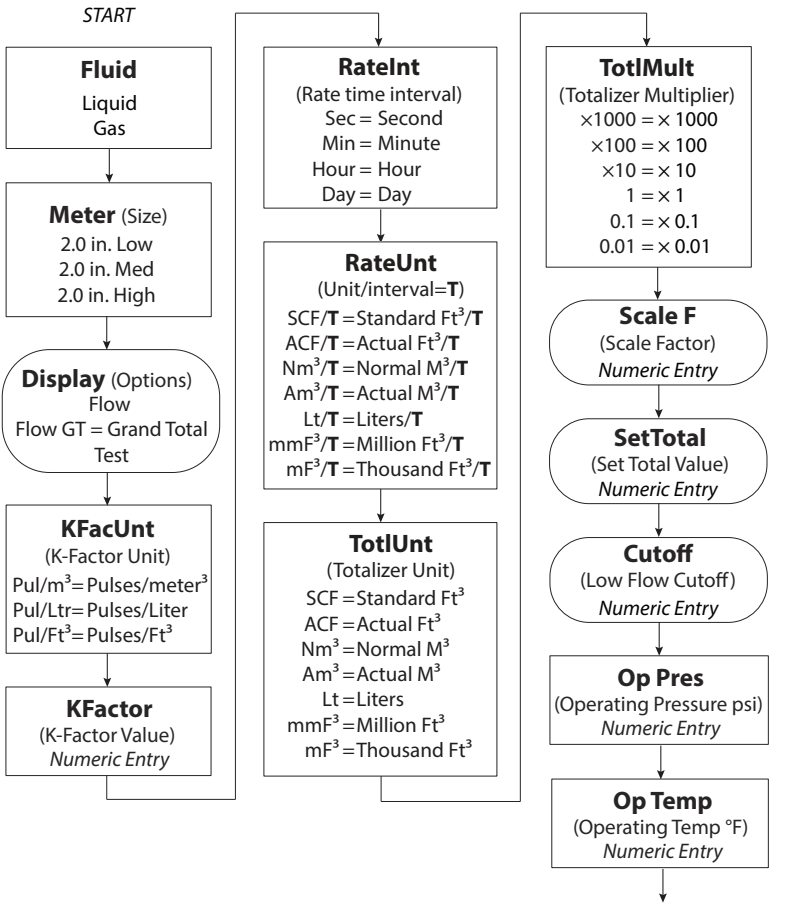

Continued on next page.

Shape Key

Basic Menu

Extended Menu

Sub Menu

Advanced I/O Gas (continued)

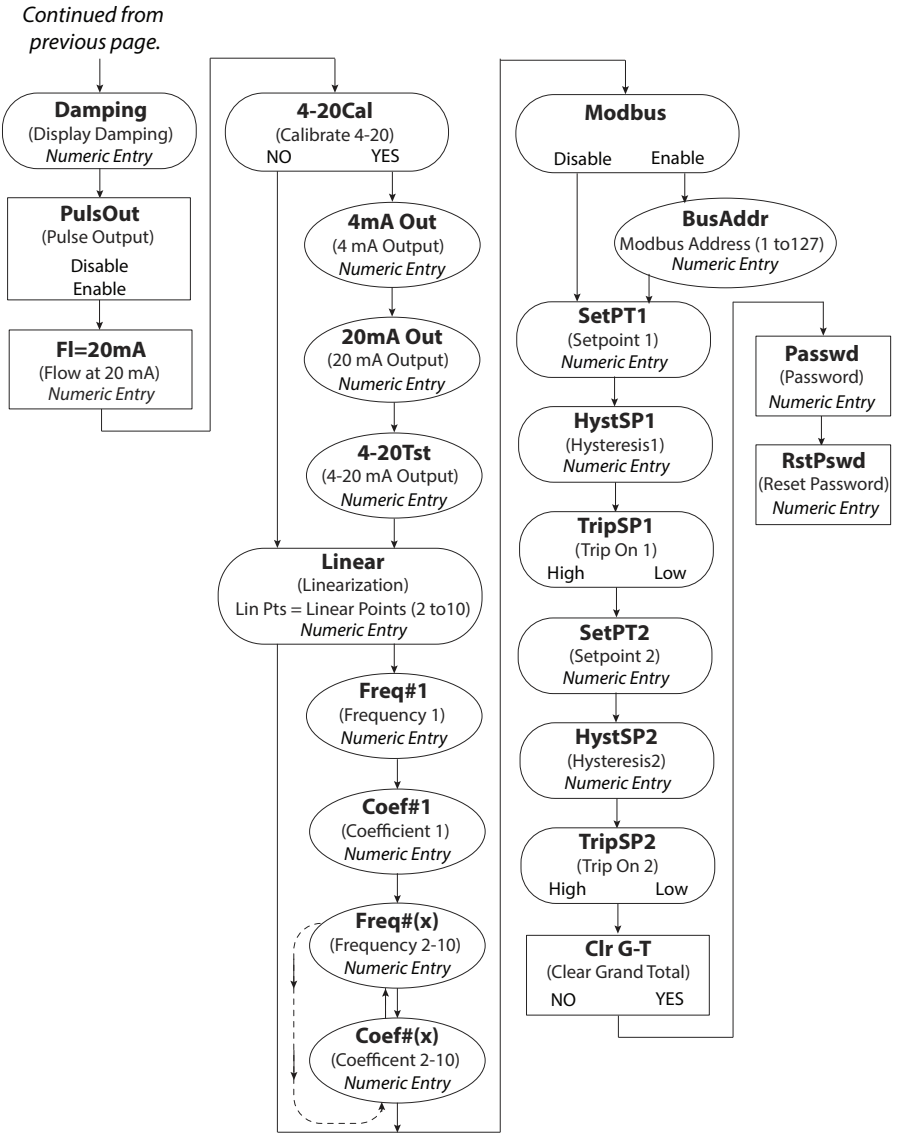

Liquid (Solar Powered)

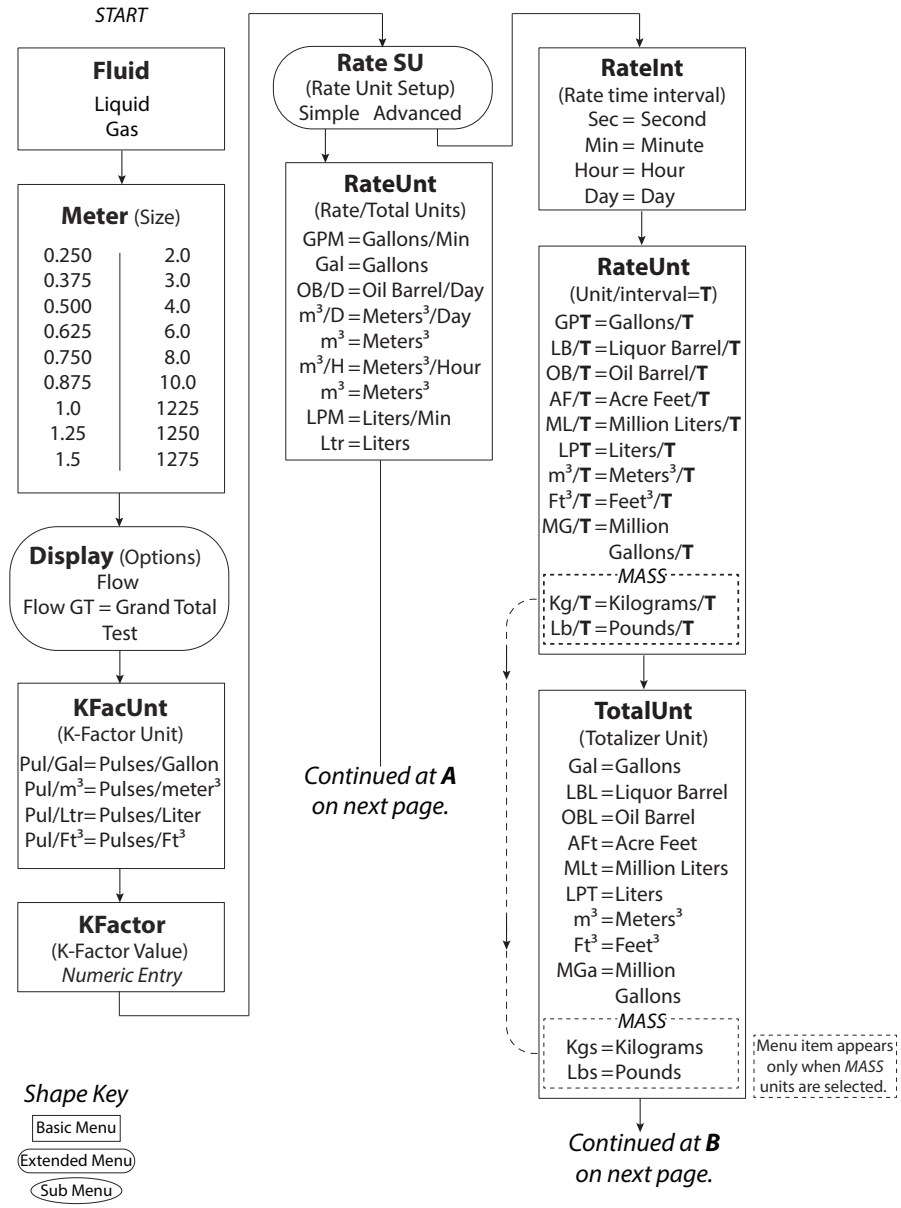

Liquid (Solar Powered) (continued)

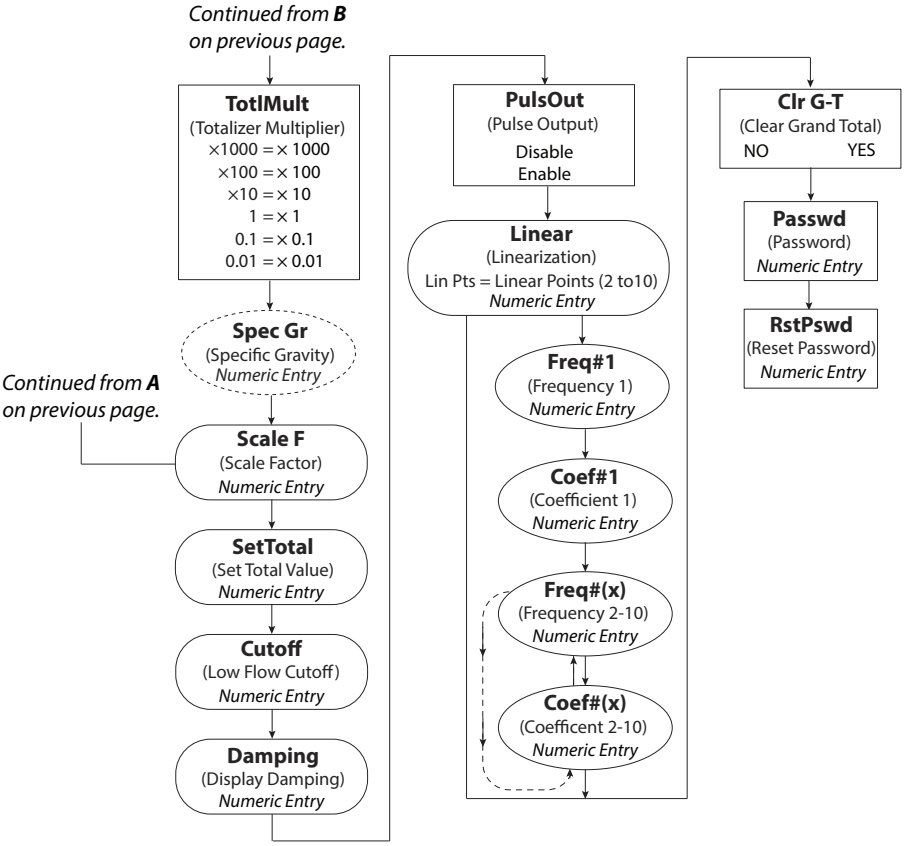

Gas (Solar Powered)

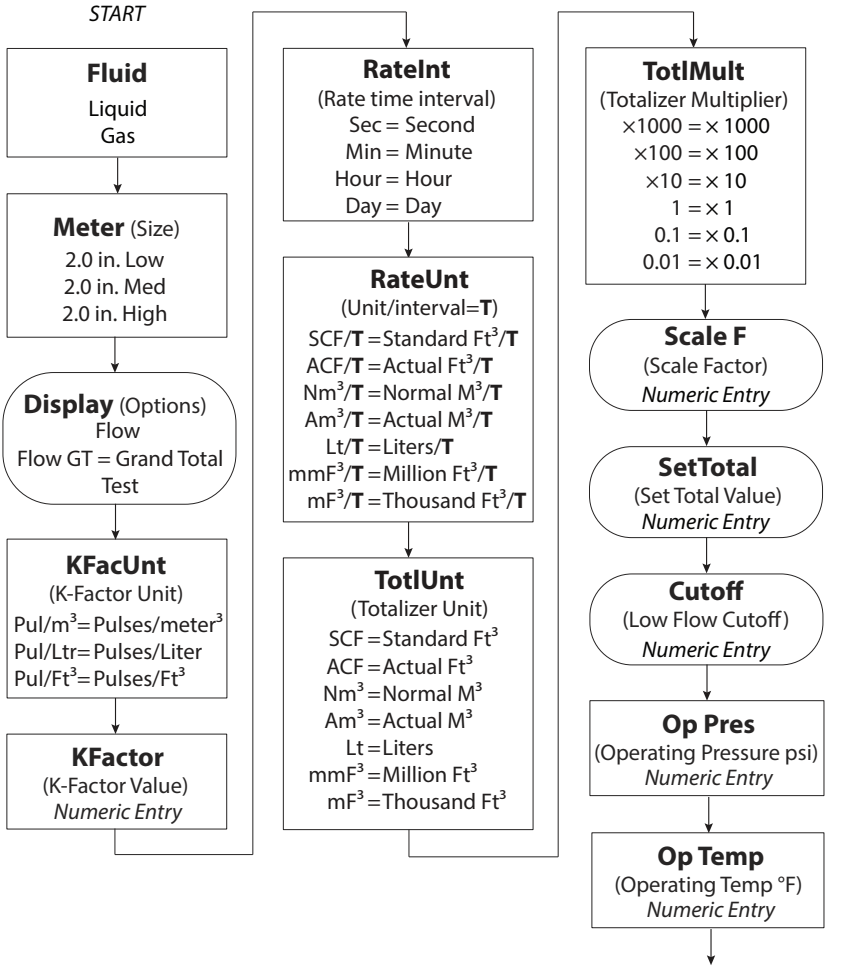

Continued on next page.

Shape Key

Basic Menu

Extended Menu

Sub Menu

Gas (Solar Powered) (continued)

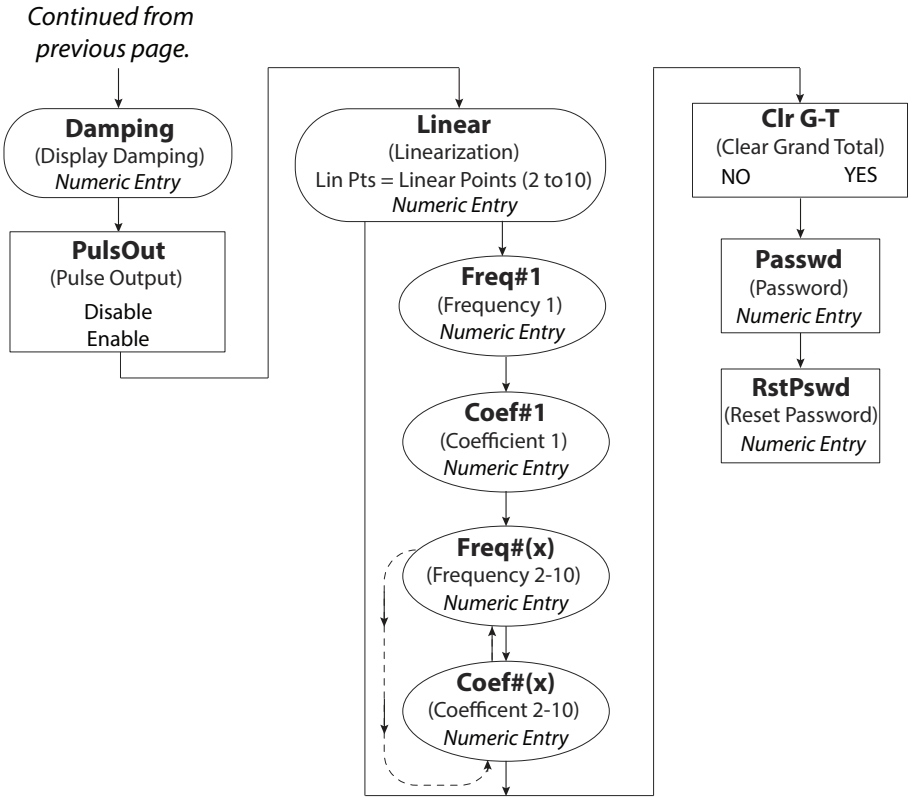

PROGRAMMING

The following programming assumes the meter is set for liquid. Parameters for gaseous fluids can be found in *"Gas" on page 39*.

NOTE: All of the following parameters appear in *Extended Programming* mode. Parameters with an asterisk (*) appear in *Programming* mode as well.

Saving Programmed Parameters

When navigating through the menus with the **ENTER** button, the programmed parameters are not permanently saved. Make sure to use the **MENU** button to save that information before leaving the meter.

IMPORTANT

*If the menu times out before the parameters are saved with the **MENU** button, all that programming information is lost. Make sure to save with the **MENU** button.*

Liquid

Select Fluid*

At the *Fluid* prompt, press **ENTER** to view the current fluid type. If the current fluid type is correct, press **ENTER** to advance to the next parameter. To change the fluid type, press **UP** or **RIGHT** to switch between *Liquid* or *Gas*. Press **ENTER** to advance to the *Meter* parameter.

NOTE: The fluid selection choice affects which menu choices are available.

Select Meter Size*

At the *Meter* prompt, press **ENTER** to display the current meter size. If the current meter size is correct, press **ENTER** to advance to the next parameter. To change the meter size, press **UP** or **RIGHT** to scroll to the correct meter size. Press **ENTER** to advance to the next parameter.

NOTE: The meter size selection refers to the bore of the meter and not the connections size. For a listing of the Blancett turbine bore sizes, see the default K-factor table in *"Default K-Factor Values" on page 40*.

NOTE: In *Programming* mode, the monitor advances to the *KFacUnit* parameter. See *"Select Meter's K-Factor Unit*" on page 27*.

Select Display Function

The B3000 monitor has three display settings: *Flow*, *Grand Total*, and *Test*.

Flow

Use the *Flow* setting for normal operation of the monitor. In this mode, the display shows both the instantaneous flow rate and current total simultaneously. See *Figure 17*.

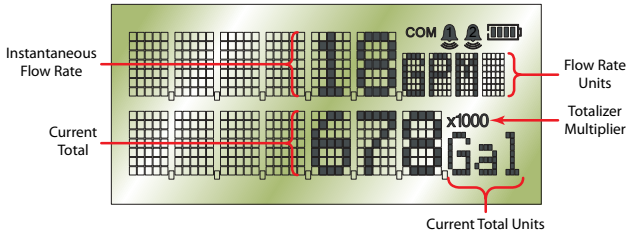

Figure 17: Instantaneous flow rate and current total

Grand Total

The *Flow-GT* setting forces the meter to alternate between the instantaneous flow and the grand total with roll-over counts. See *Figure 18*.

The grand total is the accumulation of all the fluid that has gone through the meter since the last time the grand total was cleared. This totalizer is in addition to the current total totalizer on the display and is always enabled.

In addition, the grand total screen displays the number of times the grand total has reached its maximum count (9,999,999) and rolled over to zero.

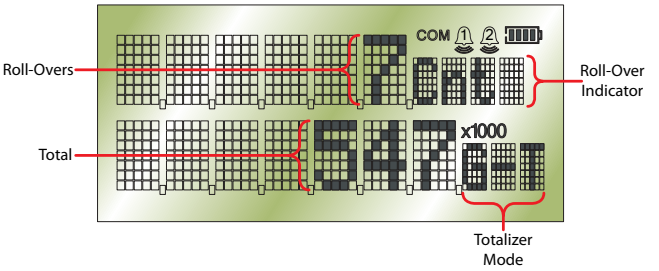

Figure 18: Grand total

Test

The *Test* setting places the monitor into a special diagnostic mode that shows the current input frequency and the accumulated input counts. *Figure 19* shows the layout for test mode values. The *Test* mode makes it possible for you to see precisely the frequency input the monitor is seeing and is very useful in troubleshooting and noise detection.

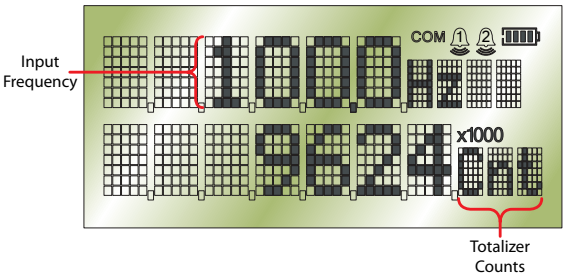

Figure 19: Test mode screen

At the *Display* prompt, press **ENTER** to view the current display setting. If the current display setting is correct, press **ENTER** to advance to the next parameter. To change the display setting, press **UP** or **RIGHT** to scroll through the display options. Press **ENTER** to advance to the *KFacUnit* parameter.

Select Meter's K-Factor Unit*

At the *KFacUnt* prompt, press **ENTER**. The display shows the current K-factor unit. If the current selection is correct, press **ENTER** to advance to the next parameter. To change the K-factor unit, press **UP** or **RIGHT** to scroll to the correct unit, the units should match the units that the meter was calibrated in. Press **ENTER** to advance to the *KFactor* parameter.

Enter Meter's K-Factor*

NOTE: The K-factor supplied with your meter, or calculated from calibration data, is needed to complete this step.

At the *KFactor* prompt, press **ENTER**. The most significant digit in the K-factor flashes. If the current K-factor is correct, press **ENTER** to advance to the next parameter. To change the K-factor, press **UP** to increment the digit until it matches the meter's first K-factor digit. Press **RIGHT** to advance to the next digit. Repeat this process until all K-factor digits have been entered. Press **ENTER** to advance to the next parameter.

NOTE: The number of digits available before and after the decimal point is determined by the bore size of the flow sensor being used. The largest K-factors are associated with the smallest bore sizes. The maximum allowable K-factor is 99999.9. The minimum must be at least 1.000. If an out of range number is entered, the display flashes *Limit* and refuses the entry.

On standard and solar models, the monitor advances to the *RateSU* parameter. On all other models the monitor advances to the *RateInt* parameter.

Select Simple or Advanced Rate Options (Standard and Solar Models Only)

The *RateSU* prompt allows you to choose between simple and advanced unit and interval options. If *Simple* is selected, the rate and total options are reduced to the five most common combinations, avoiding the need to make separate unit and interval choices. If *Advanced* is selected, individual unit and interval options can be selected.

At the *RateSU* prompt, press **ENTER**. Press **UP** or **RIGHT** to toggle between the *Simple* and *Advanced*. Press **ENTER** to advance to the next parameter.

If *Simple* is selected, the monitor advances to the *FloUnit* parameter. If *Advanced* is selected, the monitor advances to the *RateInt* parameter. See *"Select Rate Interval*"*.

Select the Units

At the *FloUnit* parameter, press **ENTER**. Press **UP** or **RIGHT** to scroll through the unit options. Press **ENTER** to select and save the required unit. The monitor advances to the *Scale F* parameter. See *"Enter a Scale Factor" on page 29*.

Select Rate Interval*

At the *RateInt* prompt, press **ENTER**. The monitor flashes the current time interval. If the current selection is correct, press **ENTER** to advance to the next parameter. To change to an alternate time interval, press **UP** or **RIGHT** to scroll to the correct time interval. Press **ENTER** to advance to the *RateUnt* parameter.

Select Flow Rate Units*

At the *RateUnt* prompt, press **ENTER**. The monitor flashes the current rate unit. If the current selection is correct, press **ENTER** to advance to the next parameter. To change to an alternate unit, press **UP** or **RIGHT** to scroll to the correct rate unit and Press **ENTER** to advance to the *TotlUnt* parameter.

Select Total Units of Measure*

At the *TotlUnt* prompt, press **ENTER**. The monitor flashes the current total units. If the current selection is correct, press **ENTER** to advance to the next parameter. To change to an alternate unit, press **UP** or **RIGHT** to scroll to the correct totalization unit. Press **ENTER** to advance to the *TotlMul* parameter.

Select Total Multiplier*

This parameter displays the accumulated flow total in multiples of 10. For example, if the optimum totalization unit is 1000 gallons, the unit total display increments by one digit for every 1000 gallons monitored. In *Run* mode, at 1000 gallons the total monitor reads 1, at 3000 gallons the total display reads 3. This feature eliminates the need to look at a total, count the digits and mentally insert commas for each 1000 multiple.

At the *TotlMul* prompt, press **ENTER** . The monitor shows the current total multiplier. If the selection is correct, press **ENTER** to advance to the next parameter. To change to an alternate multiplier, press **UP** or **RIGHT** to scroll to the correct multiplier unit and press **ENTER** to and advance to the next parameter.

If the *RateUnt* or *TotlUnt* parameter has been set to pounds or kilograms, the monitor advances to the *Spec Gr* parameter. At any other setting, the monitor advances to *PulsOut* in *Programming* mode. See *"Totalizer Pulse Output*" on page 31*.

*Enter Specific Gravity Value**

Mass readings in the B3000 monitor are not temperature or pressure compensated so it is best to enter the specific gravity of the fluid as close to the system running temperature as possible. As liquids are essentially incompressible, pressure compensation is not necessary for liquids.

At the *Spec Gr* prompt, press **ENTER**. The most significant digit of the current specific gravity flashes. If the current specific gravity is correct, press **ENTER** to advance to the next parameter. To change to an alternate specific gravity, press **UP** to increment the flashing digit until you reach the first digit of the new specific gravity. Press **RIGHT** to move to the next digit. When all digits have been entered, Press **ENTER** to advance to the next parameter.

NOTE: If *Gas* was chosen as the fluid, see *"Gas" on page 39* and follow the directions for the gas parameters.

In *Programming* mode, the monitor advances to the *PulsOut* parameter (see *"Totalizer Pulse Output*" on page 31*).

Enter a Scale Factor

The scale factor is used to force a global span change. For example, in *Run* mode the display is reading a consistent three percent below the expected values at all flow rates. Rather than changing the K-factor and linearization parameters individually, the scale factor can be set to 1.03 to correct the readings. The range of scale factors is from 0.10…5.00. The default scale factor is 1.00.

At the *Scale F* prompt, press **ENTER**. The first digit of the existing scale factor flashes. If the current selection is correct, press **ENTER** to advance to the next parameter. To change to an alternate scale factor, press **UP** to increment the display digit until it matches the first digit of the new scale factor. Press **RIGHT** to advance to the next digit. Repeat for all digits. Press **ENTER** to advance to the *SetTotl* parameter.

NOTE: If the number you enter is out of range the display flashes *Limit* and refuses the entry.

Preset Total

The preset total parameter sets the totalizer to a predetermined amount. The preset can have seven digits up to 8,888,888.

At the *SetTotl* prompt, press **ENTER**. The monitor displays the current set total. If the set total is correct, press **RIGHT** to advance to the next parameter. To change the set total, press **ENTER** again. The first digit of the current preset total flashes. Press **UP** to increment the display digit until it matches the first digit of the correct preset. Press **RIGHT** to advance to the next digit. Repeat for all digits. Press **ENTER** to advance to the *Cutoff* parameter.

NOTE: If the number you enter is out of range the display flashes *Limit* and refuses the entry.

Low Flow Cutoff

The flow cutoff shows low flow rates (that can be present when pumps are off and valves are closed) as zero flow on the flow monitor. A typical value would be about five percent of the flow sensor's maximum flow.

Enter the low flow cutoff as an actual flow value. For example, if the maximum flow rate for the flow sensor was 100 gpm, set the low flow cutoff value to 5.0.

At the *Cutoff* prompt, press **ENTER**. The first digit of the current low flow cutoff flashes. If the current selection is correct, press **ENTER** to advance to the next parameter. To change the low flow cutoff, press **UP** to increment the display digit until it matches the first digit of the new low flow cutoff value. Press **RIGHT** to advance to the next digit. Repeat for all digits. Press **ENTER** to advance to the *Damping* parameter.

NOTE: If the number you enter is out of range the display flashes *Limit* and refuses the entry.

NOTE: If the fluid being measured is set to *Gas*, the monitor advances to *Op Pres* in *Extended Programming* mode. See *"Gas" on page 39*.

Damping Factor

The damping factor is increased to enhance the stability of the flow readings. Damping values are decreased to allow the monitor to react faster to changing values of flow. This parameter can be any value between 0…99 %, with 20 being the default.

At the *Damping* prompt, press **ENTER**. The most significant digit of the current setting flashes. If the current selection is correct, press **ENTER** to advance to the next parameter. To change the damping value, press **UP** to increment the display digit until it matches the new damping value. Press **RIGHT** to advance to the next digit. Press **ENTER** to advance to the *PulsOut* parameter.

Totalizer Pulse Output*

The *PulsOut* parameter can be enabled or disabled. When enabled, the output generates a fixed width 30 mS duration, pulse every time the least significant digit of the totalizer increments. The amplitude of the pulse is dependent on the voltage level of the supply connected to the pulse output and is limited to a maximum 28V DC.

The B3000 monitor provides two types of totalizer pulses. The basic open drain FET output, *Figure 20* and *Figure 21*, provides a ground referenced output pulse that swings between about 0.7V DC and V_{CC}.

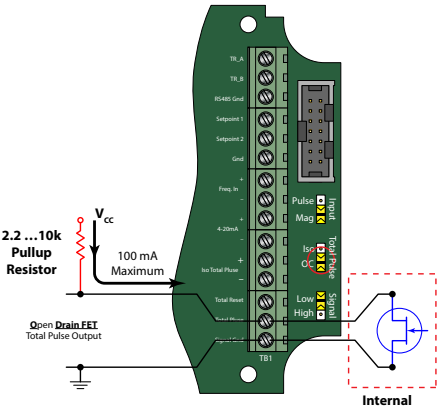

Figure 20: Open drain connections (NEMA 4X)

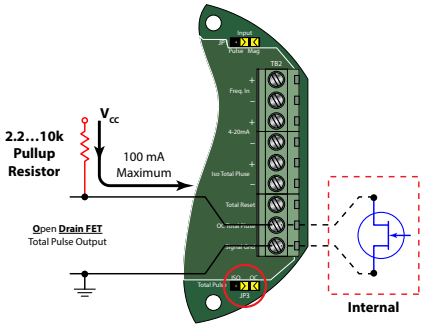

Figure 21: Open drain connections (Ex-Proof)

The isolated pulse output (ISO), *Figure 22* and *Figure 23*, is an open collector output with the emitter of the transistor connected to the negative output terminal and is not referenced to ground. This output is optically isolated from the input signal for systems that require a totally isolated output pulse.

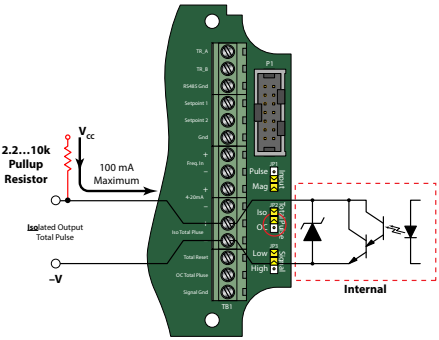

Figure 22: Opto-isolated open collector connections (NEMA 4X)

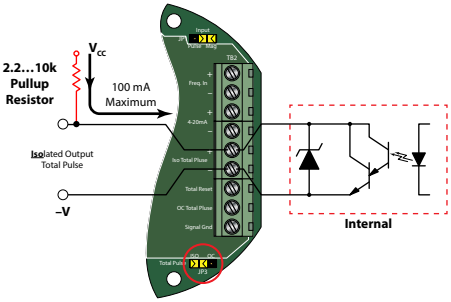

Figure 23: Opto-isolated open collector connections (Ex-Proof)

Both outputs have a maximum current capacity of 100 mA and require a pullup resistor. The value of the pullup resistor is dependent on the supply voltage and the maximum current required by the load device.

At the *PulsOut* parameter, press **ENTER**. The current setting displays on the screen. Press **UP** or **RIGHT** to toggle between *Disabled* and *Enabled*. Press **ENTER** to select the required setting. The monitor advances to the next parameter.

On explosion-proof models, the monitor advances to the *Rst Key* parameter. On all other models, the monitor advances to the *Fl=20mA* parameter.

Enable Reset Through the Glass (Explosion-Proof Models Only)

The *Rst Key* prompt enables or disables the through-the-glass total reset function on explosion-proof models. When enabled, the monitor can be reset without removing the front cover. When disabled, the monitor can only be reset by removing the front cover, and pressing and holding **MENU** and **ENTER** simultaneously.

At the *Rst Key* prompt, press **ENTER**. The current setting displays. Press **UP** or **RIGHT** to toggle between *Disable* and *Enable*. Press **ENTER** to select the required setting. The monitor advances to the *Fl=20mA* prompt.

Flow at 20 mA

This setting normally represents the maximum rate of the flow sensor connected to the display, but other entries are possible.

At the *Fl=20mA* prompt, press **ENTER**. The first digit of the current setting flashes. If the current setting is correct, press **ENTER** to advance to the next parameter. If the current setting requires a change, press **UP** to increment the display digit until it matches the first digit of the required maximum flow value. Press **RIGHT** to advance to the next digit. Repeat for all of the maximum flow at 20 mA digits. Press **ENTER** to advance to the *4-20Cal* parameter.

NOTE: In *Programming* mode, the monitor advances to the *Clr G-T* parameter. See *"Clear Grand Total" on page 38*.

4…20 mA Calibration

This setting allows the fine adjustment of the Digital to Analog Converter (DAC) that controls 4…20 mA output. If the output needs to be adjusted for any reason the 4…20 mA calibration procedure is used.

At the *4-20Cal* prompt, press **ENTER**. The monitor displays *No*. If you do not need to complete the 4…20 calibration, press **ENTER** to advance to the *Linear* parameter. See *"Linearization" on page 34*. To complete the 4…20 calibration, press **UP** or **RIGHT** to change the display to *Yes*. Press **ENTER** to advance to the *4mA Out* parameter.

The DAC used in the B3000 monitor is a twelve bit device. The valid entries are 0…4095.

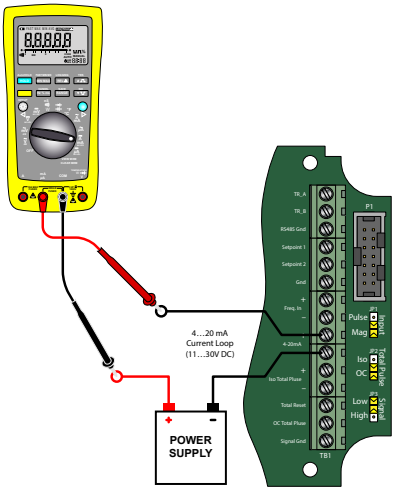

Figure 24: 4…20 mA calibration setup

4 mA Adjustment

To set the 4 mA value, connect an ammeter in series with the loop power supply as shown in *Figure 24*. The 4 mA DAC setting is typically 35…50. At the *4mA Out* prompt, press **UP** to increase or **RIGHT** to decrease the current output while monitoring the ammeter. When a steady 4 mA reading is established on the ammeter, press **ENTER** on the monitor to advance to the *20mAOut* parameter.

20 mA Adjustment

The 20 mA adjustment is performed using the same procedure as the 4 mA adjustment.

4…20 mA Test

The 4…20 mA test simulates the mA output values between 4…20 to check output tracking. At the *4-20 Test* prompt the current output flashes. Press **UP** to increase the simulated mA output or **RIGHT** to decrease in increments of 1 mA. The ammeter should track the simulated mA output. If a 4…20 mA test is not necessary, press **ENTER** to advance to the *Linear* parameter.

NOTE: Press **ENTER** when the monitor is in test mode to exit the test mode and move on to the next programming parameter.

Linearization

To increase accuracy, linearize the monitor. The linearization function accepts a maximum of ten points and requires additional calibration data from the meter being used with the monitor. Typically, calibration information can be obtained in three, five and ten points from the flow meter's manufacturer. If linearization is not needed, press **RIGHT** to advance to the Modbus parameter. See *"Modbus" on page 35*. To complete linearization, press **ENTER** at the *Linear* prompt. The meter advances to the *Lin Pts* parameter.

Number of Points

The *Lin Pts* value displays. If the number of points is set to *0*, linearization is disabled. Press **ENTER.** The most significant digit of the number of points entry begins to flash. The first number can be a *1* or a *0* only. Press **UP** to change the first digit. Press **RIGHT** to move to the least significant digit.

NOTE: If the number you enter is out of range the display flashes *Limit* and refuses the entry.

Press **ENTER** to advance to the *Freq#1* prompt.

NOTE: If the number of linear points is set to *1* the B3000 monitor assumes you are entering the maximum frequency and coefficient. Further, the meter assumes that the implied first point is at a frequency of 0 Hz and a coefficient of 0.

Frequency

At the *Freq#1* prompt, press **ENTER**. The first digit of the first linear point's frequency input flashes. Press **UP** to increment the numerical values and **RIGHT** to change the position of the number being entered. When the frequency value input is complete, Press **ENTER** to advance to the *Coef#1* parameter.

Coefficient

The coefficient is the value applied to the nominal K-factor to correct it to the exact K-factor for that point. The coefficient is calculated by dividing the average (nominal) K-factor for that point by the actual K-factor for the flow meter.

$$\text{Linear Coefficient} = \frac{\text{Nominal K-Factor}}{\text{Actual K-Factor}}$$

At the *Coef#1* prompt, press **ENTER**. The first digit of the coefficient flashes. Press **UP** to increment the digit, and **RIGHT** to move to the next digit. When all digits have been entered, Press **ENTER** to advance to the next frequency input.

Continue entering pairs of frequency and coefficient points until all data has been entered. Press **ENTER** to advance to the *Modbus* parameter.

NOTE: The frequency values must be entered in ascending order. If a lower frequency value is entered after a higher value, the B3000 monitor flashes *Limit* followed by the minimum frequency value acceptable to the display.

Example:

The following is actual data taken from a one inch turbine flow sensor calibrated with water.

Unit Under Test (UUT) Calibration Data Table In GPM					
Actual	**UUT Frequency**	**UUT Actual K-factor**	**(Hz x 60) Nominal K**	**Linear Coefficient**	**Raw Error**
50.02 gpm	755.900 Hz	906.72 counts/ US gal	49.72 gpm	1.0060	0.59%
28.12 gpm	426.000 Hz	908.96 counts/ US gal	28.02 gpm	1.0035	0.35%
15.80 gpm	240.500 Hz	913.29 counts/ US gal	15.82 gpm	0.9987	–0.13%
8.88 gpm	135.800 Hz	917.57 counts/ US gal	8.93 gpm	0.9941	–0.59%
4.95 gpm	75.100 Hz	910.30 counts/ US gal	4.94 gpm	1.0020	0.20%
Nominal K (NK)		912.144		—	—

Table 2: Sample linearization data

In this example, the linear coefficient has already been calculated by the calibration program so all that is required is to enter *5* into the number of linear points *Lin Pts* parameter and then enter, in order, the five frequency, linear coefficient data pairs.

Modbus

The Modbus output parameter can be enabled or disabled. When enabled, communications with the B3000 monitor are completed using the Modbus RTU protocol. For additional information see *"Modbus Interface" on page 49*.

At the *Modbus* prompt, press **ENTER**. The current state of the Modbus output is shown. If the current state is correct, press **ENTER** to advance to the next parameter. To change the Modbus setting, press **UP** or **RIGHT** to toggle between states. When the proper state displays Press **ENTER** to advance to the *BusAddr* parameter.

Bus Address

If the Modbus output is enabled, you must choose a valid Modbus address. Every device communicating over the RS485 communications bus using the Modbus protocol must have a unique bus address. Address values range from 0…127 with 0 being the default.

At the *BusAddr* prompt, press **ENTER**. The first digit of the address flashes. If the current setting is correct, press **ENTER** to advance to the next parameter. To change the address, press **UP** to increment the display digit until it matches the first digit of the new bus address. Press **RIGHT** to advance to the next digit. Repeat for all digits of the address. Press **ENTER** to accept the new address and advance to the *SetPt 1* parameter.

Set Points

Set points allow the meter to signal when a specific flow condition has been achieved. They are commonly used to indicate high or low flow conditions that need attention. The B3000 monitor has two open collector outputs controlled by the set point function.

The set point transistors have the same current limitations and setup requirements as the totalizing pulse output transistors described previously (see *Figure 20 on page 31*, *Figure 21 on page 31, Figure 22 on page 31 and Figure 23 on page 31*).

Both set point one and set point two are configured using the same procedures but the hysteresis and tripping conditions are independently set for each set point output.

NOTE: In most instances, the current capacity of an open collector transistor is not sufficient to operate old style counters that relied on relay contact closures. When used with basic counting circuits, a solid-state relay is needed.

Set Point 1

The set point is the flow value at which the output transistor changes state. It is set using the same units as the rate units.

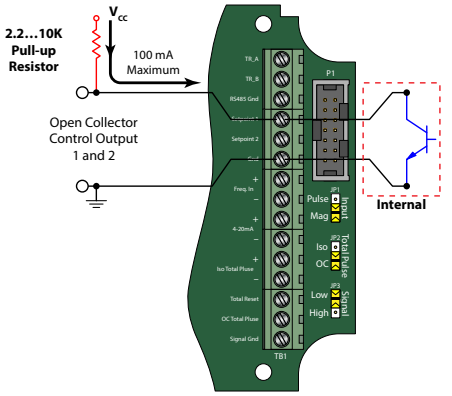

Figure 25: Set point output (NEMA 4X)

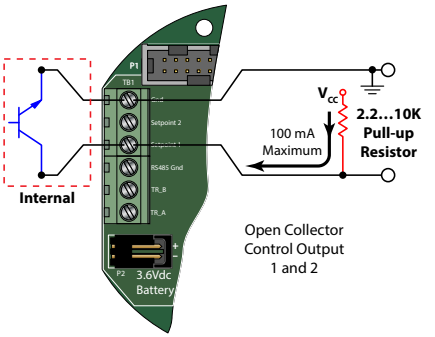

Figure 26: Set point output (Ex-Proof))

At the *SetPt 1* prompt, press **ENTER**. The most significant digit of the current setting flashes. If the current setting is correct, press **ENTER** to advance to the next parameter. To change the current setting, press **RIGHT** to advance to the first digit of the required set point value. Press **UP** to increment the digit until it matches the first number of the required set point. Repeat for all the digits the set point. Press **ENTER** to accept the new set point and advance to the *HystSP1* parameter.

Hysteresis 1

The hysteresis parameter modifies how the output transistor reacts around a set point and prevents an output from turning on and off rapidly when the programmed flow rate is at, or very near, the set point.

For example, a low flow alarm is set to activate when the flow falls below a pre-programmed point. When the flow is reduced to the set point, even small changes of flow above the set point turn the output off, disabling the alarm. Without hysteresis, if the flow rate fluctuates slightly above and below the set point, the output rapidly cycles between on and off states. See *Figure 27 on page 37*. The hysteresis value is set using the same units as the rate units.

At the *HystSP1* prompt, press **ENTER**. The most significant digit of the current setting flashes. If the current setting is correct, press **ENTER** to advance to the next parameter. To change the current setting, press **RIGHT** to advance to the first digit of the new hysteresis value. Press **UP** to increment the digit until it matches the first number of the new hysteresis. Repeat for all the digits of the hysteresis and then Press **ENTER** to advance to the *TripSP1* parameter.

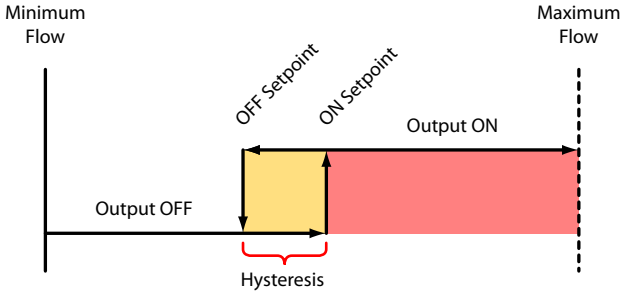

Figure 27: Set point actions

NOTE: Neither the set point nor the hysteresis values are checked for compatibility with the meter size. Check the values to prevent the outputs from working unexpectedly.

Trip SP 1

The trip parameter can be set for either *High* or *Lo*. When set to high, the open collector transistor stops conducting and sends the output high when the set point is reached. The output will not go low again until the flow rate falls below the set point minus the hysteresis value. When set to low, the open collector transistor starts conducting and sends the output low when the set point is reached. The output will not go high again until the flow rate exceeds the set point plus the hysteresis value.

For example, if the set point is 10 gpm, the hysteresis is set to 2 gpm and the trip set point is set to *High* (see *Figure 28*). When the flow goes above 10 gpm, the OC transistor stops conducting and the output goes high. The output stays high until the flow rate drops below 8 gpm, which is the set point (10 gpm) minus the hysteresis (2 gpm).

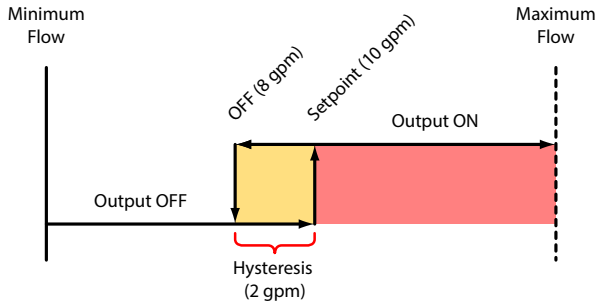

Figure 28: Set point example

At the *TripSP1* prompt, press **ENTER**. The current tripping condition setting displays. If the current setting is correct, press **ENTER** to advance to the next parameter.

If the current setting requires a change, press **UP** or **RIGHT** to change to the alternate choice. Press **ENTER** to advance to the *SetPt 2* parameter.

The *SetPt 2*, *HystSP2* and *TripSP2* parameters are set using the same procedures as the *SetPt 1*, *HystSP1* and *TripSP1* parameters. When these parameters have been entered, the monitor advances to the *Clr G-T* parameter.

Clear Grand Total

At the *Clr G-T* prompt, press **ENTER**. The monitor displays *No* on the screen. To clear the grand total, press **UP** or **RIGHT** to change from *No* to *Yes*. Press **ENTER** to advance to the *Passwd* parameter.

The totalizer can also be reset using a hardware reset, as shown in the following diagrams or by pressing **MENU** and **ENTER** simultaneously.

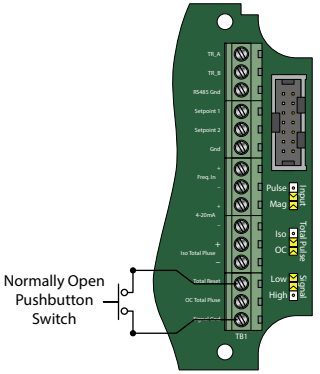

Figure 29: NEMA 4X hardware reset

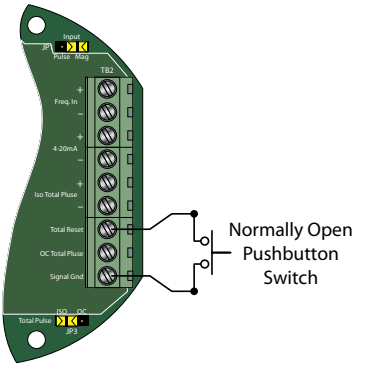

Figure 30: Ex-proof hardware reset

Password

The password setting restricts access to the *Programming* and *Extended Programming* modes. Initially, the password is set to all zeros and any user can modify the parameter settings. To change the password, press **ENTER** at the *Passwd* prompt. The first digit flashes. Press **UP** to increment the digit and **RIGHT** to advance to the next digit. After entering all digits, press **ENTER** to store the password and advance to *RstPswd*. The new password is now required to enter either programming mode. With this password set, any user is able to reset the stored totals on the monitor.

Reset Password

The reset password parameter restricts resetting the totals on the monitor. The *Password* must also be set to restrict the total reset. Initially, the password is set to all zeros and any user can reset the stored totals on the monitor. To change the password, press **ENTER** at the *RstPswd* prompt. The first digit flashes. Press **UP** to increment the digit and **RIGHT** to advance to the next digit. After entering all digits, press **ENTER** to store the password and return to the *Fluid* parameter. The reset password is now required to reset the totals on the monitor.

NOTE: Entering a password in the *Passwd* screen and leaving the password blank in the *RstPswd* screen allows for total resets (not requiring a password), but restricts programming modification.

Gas

Operating Pressure

At the *Op Pres* prompt, press **ENTER**. The first digit of the current pressure setting flashes. If the current selection is correct, press **ENTER** to advance to the next parameter. To change the operating pressure, press **UP** to increment the digit until it matches the first digit of the correct pressure value. Press **RIGHT** to move to the next digit. When all the digits have been entered, Press **ENTER** to advance to the *Op Temp* parameter.

Operating Temperature

At the *Op Temp* prompt, press **ENTER**. The first digit of the current temperature setting flashes. If the current selection is correct, press **ENTER** to advance to the next parameter. To change the operating temperature, press **UP** to increment the digit until it matches the first digit of the correct pressure value. Press **RIGHT** to move to the next digit. When all the digits have been entered, Press **ENTER** to advance to the next parameter.

In *Programming* mode the monitor advances to the *PulsOut* parameter, see *"Totalizer Pulse Output*" on page 31*.

In *Extended Programming* mode, the monitor advances to the *Damping* parameter, see *"Damping Factor" on page 30*.

Save Settings and Return to Run Mode

After entering all parameters, press **MENU**. Saving displays on the menu, followed by a blank screen and then the firmware version number. The monitor then returns to *Run* mode.

IMPORTANT

*Settings are not saved until after manually saving with the **MENU** button.*

TROUBLESHOOTING GUIDE

Trouble		Remedy
No LCD Display	Battery – B30A/B/X/Z only	Check battery voltage. Should be 3.6V DC. If the input is 3.4V DC or lower, replace the battery.
	Loop Power- not available on B30S	Check 4…20 mA input. Voltage must be within the minimum and maximum supply voltage and capable of supplying enough current to run the display. The input voltage is checked "across" or in parallel with the 4…20 mA terminals and current is checked with the ammeter in series with the 4…20 mA output.
	Solar	Place meter with solar cell exposed to a strong light source for 24 hours.
No Rate or Total Displayed		Check connection from meter pickup to display input terminals. Check turbine meter rotor for debris. Rotor should spin freely. Check programming of flow monitor.
Flow Rate Display Interprets Reading Constantly		This is usually an indication of external noise. Keep all AC wires separate from DC wires. Check for large motors close to the meter pick-up. Check for radio antenna in close proximity. Try disconnecting the pickup from the monitor pig tail. This should stop the noise.
Flow Rate Indicator Bounces		This usually indicates a weak signal. Replace pickup and/or check all connections. Examine K-factor.

DEFAULT K-FACTOR VALUES

Liquids			
Meter Bore Size	**Default K-factor**	**Lower Limit**	**Upper Limit**
0.375	20,000	16,000	24,000
0.500	13,000	10,400	15,600
0.750	2750	2200	3300
0.875	2686	2148	3223
1.000	870.0	696.0	1044
1.500	330.0	264.0	396.0
2.000	52.0	41.6	62.0
3.000	57.0	45.6	68.0
4.000	29.0	23.2	35.0
6.000	7.0	5.6	8.0
8.000	3.0	2.4	4.0
10.000	1.6	1.3	2.0

Gas	
Meter Range	**Default K-factor**
Low	325
Medium	125
High	80

BATTERY REPLACEMENT (B30A/B/X/Z ONLY)

Battery powered monitors use a single 3.6V DC D size, lithium battery. When replacement is necessary, use a clean fresh battery to provide continued trouble-free operation.

Replacement Batteries	
Manufacturer	**Part Number**
Blancett (D-Cell)	B300028
Xeno	S11-0205-10-03
Tadiran	TL-5930/F

Table 3: Replacement batteries

NEMA 4X Enclosure

1. Unscrew the four captive screws on the front panel to gain access to the battery.
2. Press the tab on the battery connector to release it from the circuit board.
3. Remove the old battery and replace it with new one and then re-fasten the front panel.

NOTE: The battery is held in place with a wire-tie that will need to be cut and replaced (see *Figure 31*). The approval on the product requires the wire tie.

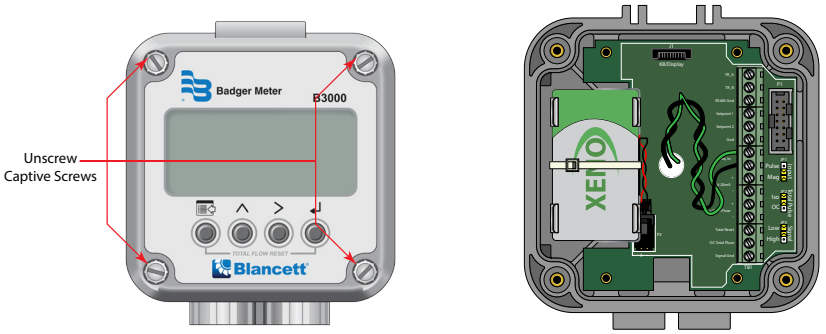

Figure 31: NEMA 4X battery replacement

The solar powered variation uses a single nickle-cadmium battery and is not field replaceable.

Explosion-Proof Enclosure

⚠DANGER

REMOVE (DE-ENERGIZE) ANY EXTERNAL POWER FROM THE UNIT BEFORE REMOVING THE SCREW COVER FROM THE ENCLOSURE. FAILURE TO DO SO CAN BE DANGEROUS. (SEE FIGURE 31 ON PAGE 41 AND FIGURE 32.)

1. Remove the screw cover from the enclosure body.
2. Remove the two thumb screws and carefully remove the circuit board assembly far enough to access the battery connector.
3. Press the tab on the battery connector plug to release it from the battery connector socket.
4. Remove the four screws holding the battery mounting plate to the enclosure base and then remove the battery mounting plate.
5. Cut the tie wrap holding the battery to the mounting plate and remove the old battery.
6. Install a new tie wrap and battery, securing the battery to the mounting plate with the tie wrap.
7. Re-install the battery mounting plate.
8. Plug the battery into the circuit board and re-install the circuit assembly into the explosion proof housing using the thumb screws.
9. Re-install the enclosure screw cover.

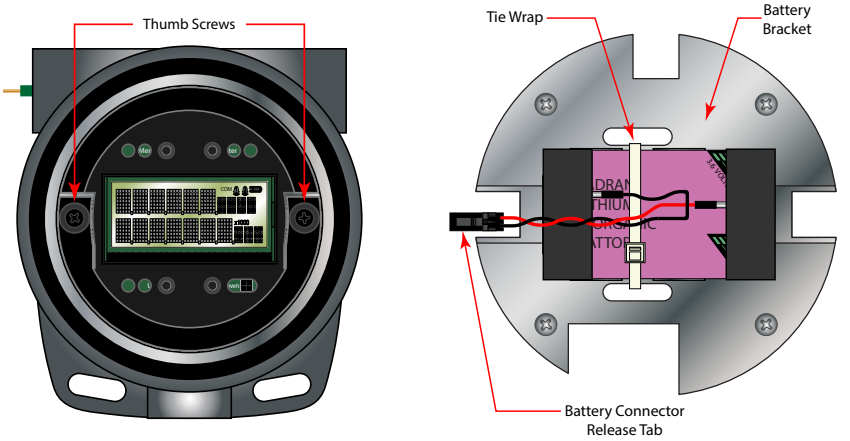

Figure 32: Ex-proof battery replacement

K-FACTORS EXPLAINED

The K-factor (with regard to flow) is the number of pulses that must be accumulated to equal a particular volume of fluid. You can think of each pulse as representing a small fraction of the totalizing unit.

An example is a K-factor of 1000 (pulses per gallon). This means that if you were counting pulses, when the count total reached 1000, you would have accumulated one gallon of liquid. Using the same reasoning, each individual pulse represents an accumulation of 1/1000 of a gallon. This relationship is independent of the time it takes to accumulate the counts.

The frequency aspect of K-factors is a little more confusing because it also involves the flow rate. The same K-factor number, with a time frame added, can be converted into a flow rate. If you accumulated 1000 counts (1 gallon) in one minute, then your flow rate would be 1 gpm. The output frequency, in Hz, is found by dividing the number of counts (1000) by the number of seconds in a minute (60) to get the output frequency.

$1000 \div 60 = 16.6666$ Hz.

If you were looking at the pulse output on a frequency counter, an output frequency of 16.666 Hz would be equal to 1 gpm. If the frequency counter registered 33.333 Hz (2×16.666 Hz), then the flow rate would be 2 gpm.

Finally, if the flow rate is 2 gpm, then the accumulation of 1000 counts would take place in 30 seconds because the flow rate that the 1000 counts is accumulated, is twice as great.

Calculating K-factors

Many styles of flow meters are capable of measuring flow in a wide range of pipe sizes. Because the pipe size and volumetric units the meter will be used on varies, it may not possible to provide a discrete K-factor. In the event that a discrete K-factor is not supplied then the velocity range of the meter is usually provided along with a maximum frequency output.

The most basic K-factor calculation requires that an accurate flow rate and the output frequency associated with that flow rate be known.

Example 1

Known values are:

Frequency	=	700 Hz
Flow Rate	=	48 gpm

$$700 \text{ Hz} \times 60 \text{ sec} = 42{,}000 \text{ pulses per min}$$

$$\text{K factor} = \frac{42{,}000 \text{ pulses per min}}{48 \text{ gpm}} = 875 \text{ pulses per gallon}$$

Example 2

Known values are:

Full Scale Flow Rate = 85 gpm
Full Scale Output Frequency = 650 Hz

650 Hz × 60 sec = 39,000 pulses per min

$$\text{K factor} = \frac{39{,}000 \text{ pulses per min}}{85 \text{ gpm}} = 458.82 \text{ pulses per gallon}$$

The calculation is a little more complex if the velocity is used because you first must convert the velocity into a volumetric flow rate to be able to compute a K-factor.

To convert a velocity into a volumetric flow, the velocity measurement and an accurate measurement of the inside diameter of the pipe must be known as well as one US gallon of liquid is equal to 231 cubic inches.

Example 3

Known values are:

Velocity = 4.3 ft/sec
Inside Diameter of Pipe = 3.068 in.

Find the area of the pipe cross section.

$$\text{Area} = \pi r^2$$

$$\text{Area} = \pi \left(\frac{3.068}{2}\right)^2 = \pi \times 2.35 = 7.39 \text{ in}^2$$

Find the volume in one foot of travel.

$$7.39 \text{ in}^2 \times 12 \text{ in. (1 ft)} = \frac{88.71 \text{in}^2}{\text{ft}}$$

What portion of a gallon does one foot of travel represent?

$$\frac{88.71 \text{ in}^3}{231 \text{ in}^3} = 0.384 \text{ gallons}$$

So for every foot of fluid travel 0.384 gallons will pass.

What is the flow rate in gpm at 4.3 ft/sec?

0.384 gallons × 4.3 FPS × 60 sec (1 min) = 99.1 gpm

Now that the volumetric flow rate is known, all that is needed is an output frequency to determine the K-factor.

Known values are:

Frequency = 700 Hz (By measurement)
Flow Rate = 99.1 gpm (By calculation)

700 Hz × 60 sec = 42,000 pulses per gallon

$$\text{K factor} = \frac{42{,}000 \text{ pulses per min}}{99.1 \text{ gpm}} = 423.9 \text{ pulses per gallon}$$

DECLARATION OF CONFORMITY

Badger Meter

EU/UK Declaration of Conformity

We,
Badger Meter, Inc.
4545 W. Brown Deer Rd.
Milwaukee, WI 53223, USA

Declare under our sole responsibility that **our Blancett Turbine Meter Monitors B30X, B30Z & Tech-Flo Turbine Meter Monitors TF30X, TF30Z** to which this declaration relates is in conformity with the following Directives and standards when installed per the applicable Badger Meter Installation requirements.

ATEX Directive 2014/34/EU	Element Materials Technology (formerly TRaC Global) Notified Body #2812 EU Type Examination Certificate # TRAC12ATEX0017X QAN Cert. No. FM19ATEXQ0034, Notified Body #2809
S.I. 2016/1107	CML Approved Body #2503 UKEX Type Certificate #CML21UKEX1126X UK QAN Cert. No. FM21UKQAN0016, Approved Body #1725

Ⓔx II 2 G Ex d IIC T4 Gb Ⓔx and II 2D Ex tb IIIC T135°C Db [Ta=-30 to +70°C]

Designated Standards:	Harmonized Standards:
BS EN IEC 60079-0:2018	EN 60079-0:2012/A11:2013
BS EN 60079-1:2014	EN 60079-1:2014
BS EN 60079-31:2014	EN 60079-31:2014

EMC Directive 2014/30/EU S.I. 2016/1091	IEC 61000-6-1:2007-02 IEC 61000-6-3:2007-02 These products are constructed in accordance with the applicable safety requirements of EN 61010-1 CISPR 11:2009-05 (EN 55011:A1 & A2:2007-05) IEC 61000-3-2:2009-02 (EN61000-3-2:2006-05) IEC 61000-3-3:2008-06 (EN61000-3-3:2008-12) IEC 61000-4-2:2008-12 (EN61000-4-2:2009-05) IEC 61000-4-3:2008-04 (EN61000-4-3:2006-07) IEC 61000-4-4:2004-07 (EN61000-4-4:2004) IEC 61000-4-5:2005-11 (EN61000-4-5:2006-12) IEC 61000-4-6:2008-10 (EN61000-4-6:2009-05) IEC 61000-4-8:2009-09 (EN61000-4-8:2001) IEC 61000-4-11:2004-03 (EN61000-4-11:2004-10) LS Research, LLC Test Report #309378/C-771 Blancett B30x EU/UK rev. June, 2021

Quality System:		
Milwaukee WI, U.S.A ISO 9001:2015 Certificate No: C0332774 NSF International Strategic Registrations Ann Arbor, MI U.S.	Racine, WI U.S.A. ISO 9001:2015 Certificate No: FM 78587 BSI Assurance UK Limited London, UK	Tulsa, OK U.S.A. ISO 9001:2015 Certificate No: 10012834 QM15 DQS, Inc, Schaumburg, IL U.S.A.
Europa, Germany ISO 9001:2015 Certificate No: 50117040/1 DEKRA, Certification GmbH Stuttgart, Germany	Czech Republic CSN EN ISO 9001:2016 Certificate No: 08.550.557 TUV SUD, Czech Rep. s.r.o. Prague, Czech Rep.	Mexico ISO 9001:2015 Certificate No: 959 99 0459 TUV SUD America, Inc. Peabody, MA U.S.A.

Signed: Fred J Begale
Fred J Begale (Aug 4, 2021 07:46 CDT)

Name: Fred J Begale

Position: VP-Engineering

Date: Aug 4, 2021

EXPLOSION-PROOF ENCLOSURE

The ExDirect instrument enclosure is designed to house instrumentation and control equipment as well as act as a conduit.

Installation

1. ExDirect instrument enclosures are furnished with three 3/4 inch NPT offset through-feed cast hubs for conduit entries.
2. Secure the enclosure to the conduit system. If the enclosure has mounting feet, select a mounting location that will provide sufficient strength and rigidity to support the enclosure as well as the enclosed device and wiring.

⚠WARNING

ELECTRICAL POWER MUST BE "OFF" BEFORE AND DURING INSTALLATION AND MAINTENANCE.

⚠CAUTION

SELECT A MOUNTING LOCATION SO THAT THE ENCLOSURE WILL NOT BE SUBJECTED TO IMPACT BY HEAVY OBJECTS. IMPACTS CAN DAMAGE ENCLOSED DEVICES OR GLASS LENS.

3. Install sealing fittings as required by Section 501-5 and/or 502-5 of the National Electrical Code® and Section 18 of the Canadian Electrical Code or any other applicable IEC 60079-14 codes and when enclosure is installed in Class I Group B hazardous locations. (For CSA Group C applications, unsealed conduit lengths must not exceed 5 ft or 152 cm.)

⚠WARNING

DO NOT OPEN WHEN ENERGIZED. INSTALL SEAL WITHIN 18 INCHES OF ENCLOSURE. KEEP TIGHTLY CLOSED WHEN IN OPERATION.

4. Loosen set screw on instrument cover with a 2 mm Allen wrench.
5. Unthread the instrument cover and carefully set aside to prevent damage to the cover threads and glass lens.
6. Pull wires into enclosure making certain they are long enough to make the required connections and to remove the instrument or power supply if servicing is required.
7. Install instrument and power supply, if applicable, and make all electrical connections.
8. Test wiring for correctness by checking continuity and also check for unwanted grounds with insulator resistance tester. Make sure test equipment being used will not damage instrument to be housed in the ExDirect instrument enclosure.
9. Carefully re-thread cover to enclosure housing. Tighten cover until cover flange contacts body face.

⚠WARNING

THE HAZARDOUS LOCATION INFORMATION SPECIFYING CLASS AND GROUP LISTING OF EACH INSTRUMENT ENCLOSURE IS MARKED ON THE NAMEPLATE OF EACH ENCLOSURE.

⚠CAUTION

ALL UNUSED CONDUIT OPENINGS MUST BE PLUGGED. PLUG UNUSED CONDUIT OPENINGS WITH APPROVED EXPLOSION PROOF PLUGS. PLUGS MUST BE A MINIMUM OF 1/8 INCH THICK AND ENGAGE A MINIMUM OF 5 FULL THREADS.

NOTE: When installing device, be sure to check instrument dimensions to avoid interference with clamping ring on glass lens and the cover on standard units.

⚠WARNING

USE CARE TO PREVENT DIRT, GRIT OR OTHER FOREIGN MATERIAL FROM LODGING ON THREADS. IF SUCH MATERIAL SETTLES ON THREADS, CLEAN WITH KEROSENE OR STODDARD SOLVENT*, THEN RE-LUBRICATE WITH AN APPROVED THREAD LUBRICANT.

10. Tighten cover set screws with the 2 mm Allen wrench to prevent cover from loosening under vibration.

⚠WARNING

TO MAINTAIN THE EXPLOSION-PROOF INTEGRITY OF THE ENCLOSURE WITH A SCREW IN A TAPPED MOUNTING PAD HOLE, THERE MUST BE A MINIMUM OF 1/16 INCH OF MATERIAL BETWEEN THE DRILL POINT AND THE BACK WALL. IF FOR ANY REASON A SCREW WILL NOT BE THREADED INTO THE DRILLED HOLE, A MINIMUM OF 1/8 INCH OF MATERIAL MUST REMAIN BETWEEN THE DRILL POINT AND THE BACK WALL.

⚠WARNING

TO AVOID THE POSSIBILITY OF AN EXPLOSION, OXIDATION AND CORROSION, DO NOT USE GASOLINE OR SIMILAR SOLVENT.

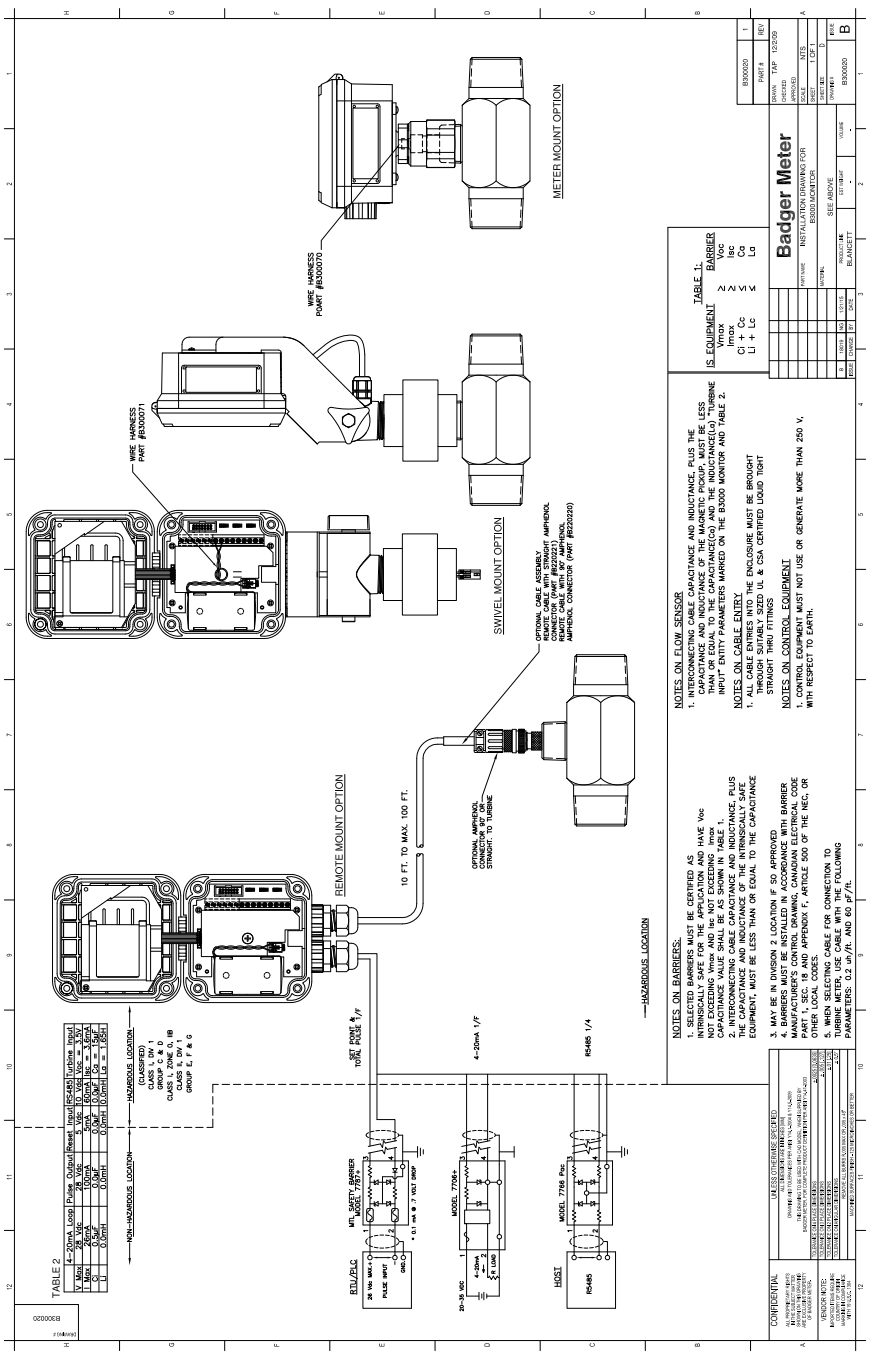
METER MOUNT OPTION
WIRE HARNESS PART #B300070
WIRE HARNESS PART #B300071
SWIVEL MOUNT OPTION
OPTIONAL CABLE ASSEMBLY REMOTE CABLE WITH STRAIGHT AMPHENOL CONNECTOR (PART #B220221) REMOTE CABLE WITH 90° AMPHENOL AMPHENOL CONNECTOR (PART #B220220)
OPTIONAL AMPHENOL CONNECTOR 90° OR STRAIGHT, TO TURBINE
REMOTE MOUNT OPTION
10 FT. TO MAX. 100 FT.
HAZARDOUS LOCATION
SET POINT & TOTAL PULSE 1/F
4-20mA 1/F
RS485 1/4
MTL SAFETY BARRIER MODEL 7787+
MODEL 7706+
MODEL 7766 Pac
RTU/PLC
HOST
TABLE 2
NON-HAZARDOUS LOCATION
HAZARDOUS LOCATION
(CLASSIFIED)
CLASS I, DIV 1
GROUP C & D
CLASS II, ZONE 0, IIB
CLASS III, DIV 1
GROUP E, F & G
NOTES ON FLOW SENSOR
1. INTERCONNECTING CABLE CAPACITANCE AND INDUCTANCE, PLUS THE CAPACITANCE AND INDUCTANCE OF THE MAGNETIC PICKUP, MUST BE LESS THAN OR EQUAL TO THE CAPACITANCE(Ca) AND THE INDUCTANCE(La) "TURBINE INPUT" ENTITY PARAMETERS MARKED ON THE B3000 MONITOR AND TABLE 2.
NOTES ON CABLE ENTRY
1. ALL CABLE ENTRIES INTO THE ENCLOSURE MUST BE BROUGHT THROUGH SUITABLY SIZED UL & CSA CERTIFIED LIQUID TIGHT STRAIGHT THRU FITTINGS
NOTES ON CONTROL EQUIPMENT
1. CONTROL EQUIPMENT MUST NOT USE OR GENERATE MORE THAN 250 V, WITH RESPECT TO EARTH.
NOTES ON BARRIERS:
1. SELECTED BARRIERS MUST BE CERTIFIED AS INTRINSICALLY SAFE FOR THE APPLICATION AND HAVE Voc NOT EXCEEDING Vmax AND Isc NOT EXCEEDING Imax CAPACITANCE VALUE SHALL BE AS SHOWN IN TABLE 1.
2. INTERCONNECTING CABLE CAPACITANCE AND INDUCTANCE, PLUS THE CAPACITANCE AND INDUCTANCE OF THE INTRINSICALLY SAFE EQUIPMENT, MUST BE LESS THAN OR EQUAL TO THE CAPACITANCE
3. MAY BE IN DIVISION 2 LOCATION IF SO APPROVED
4. BARRIERS MUST BE INSTALLED IN ACCORDANCE WITH BARRIER MANUFACTURER'S CONTROL DRAWING, CANADIAN ELECTRICAL CODE PART 1, SEC. 18 AND APPENDIX F, ARTICLE 500 OF THE NEC, OR OTHER LOCAL CODES.
5. WHEN SELECTING CABLE FOR CONNECTION TO TURBINE METER, USE CABLE WITH THE FOLLOWING PARAMETERS: 0.2 uh/ft. AND 60 pF/ft.
TABLE 1:
IS EQUIPMENT
BARRIER
Vmax ≥ Voc
Imax ≥ Isc
Ci + Cc ≤ Ca
Li + Lc ≤ La
Badger Meter
INSTALLATION DRAWING FOR B3000 MONITOR
SEE ABOVE
B300020
B
CONFIDENTIAL
UNLESS OTHERWISE SPECIFIED
VENDOR NOTE:

MODBUS INTERFACE

RS485 standards state that a daisy-chained topology is recommended with stubs being as short as possible (much shorter than the main bus length). Use a shielded twisted-pair cable no less than 24 AWG for connecting devices on a RS485 network.

The B3000 monitor is rated as a 1/8 unit load device (input impedance equal to 96 kΩ). The RS485 specification states it is capable of supporting 32 standard unit loads (1 standard unit load equals 12 kΩ). In order to determine the maximum number of devices on a network, the user must identify the unit load rating of each device on the network.

The maximum common input voltage range of the B3000 monitor is –7…10V. This differs from the RS485 standard of –7…12V. To make sure this range is achieved, the RS485 ground connection must be tied together in a daisy-chained fashion. The shield of the cable used should be tied to chassis or earth ground on only one end of the network. See *Figure 33* for an example configuration and description.

Use a termination resistor of 120 Ω at the end of the bus.

A subset of the standard Modbus commands is implemented to provide access into the data and status of the B3000 monitor. This feature is available on the B3000 monitor advanced models only. The Modbus commands and their limitations supported by the B3000 monitor can be found in *Table 4*.

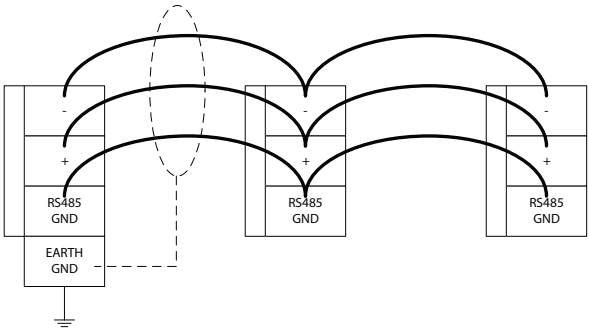

Label	Description
Minus (–)	Inverting data signal
Plus (+)	Non-inverting data signal
RS485 GND	Voltage reference for inverting and non-inverting signals
EARTH GND	Earth ground used for shield (only at one end of network)

Figure 33: Daisy-chain wiring configuration example

Command	Description
01	Read Coils
03[1]	Read Holding Registers
05	Force Single Coil

1 Function code 0x03 is limited insofar that it only allows one address (2 16-bit registers) to be read at a time. That is, multiple addresses (multiple sets of data) cannot be read (contiguous or non-contiguous) via function code 0x03.

Table 4: Modbus commands

Type	Bits	Bytes	Modbus Registers
Long Integer	32	4	2
Single Precision IEEE754	32	4	2

Table 5: Available data formats

Modbus Register / Word Ordering

The B3000 monitor sends each byte of a 16-bit register in big-endian format. For example, the hex value '1234' is sent as '12''34'. The B3000 monitor provides for big-endian and little-endian word ordering when a master requests data. To accomplish this, the B3000 monitor provides two register map spaces. See *Table 6* and *Table 7* for little-endian and big-endian register maps. Please note that both spaces provide the same data.

Register Mappings

Little-Endian

Data Component Name	Modbus Registers		Available Units
	Long Integer Format	Single Precision Floating Point Format	
Spare	40100…40101	40200…40201	—
Flow Rate	40102…40103	40202…40203	Gallons, Liters, MGallons, Cubic Feet, Cubic Meters, Acre Feet, Oil Barrel, Liquid Barrel, Feet, Meters, Lb, Kg, BTU, MBTU, MMBTU, TON Per Second, Minute, Hour, Day
Spare	40104…40105	40204…40205	
Positive Totalizer	40106…40107	40206…40207	
Grand Total Totalizer	40108…40109	40208…40209	
Battery Voltage	40110…40111	40210…40211	x.xx
Spare	40112…40113	40212…40213	—

Table 6: Modbus register map for 'little-endian' word order master devices

For reference: If the B3000 Totalizer = 12345678 hex
Register 40106 would contain 5678 hex (Word Low)
Register 40107 would contain 1234 hex (Word High)

Big-Endian

Data Component Name	Modbus Registers		Available Units
	Long Integer Format	Single Precision Floating Point Format	
Spare	40600…40601	40700…40701	—
Flow Rate	40602…40603	40702…40703	Gallons, Liters, MGallons, Cubic Feet, Cubic Meters, Acre Feet, Oil Barrel, Liquid Barrel, Feet, Meters, Lb, Kg, BTU, MBTU, MMBTU, TON Per Second, Minute, Hour, Day
Spare	40604…40605	40704…40705	
Positive Totalizer	40606…40607	40706…40707	
Grand Total Totalizer	40608…40609	40708…40709	
Battery Voltage	40610…40611	40710…40711	x.xx
Spare	40612…40613	40712…40713	–

Table 7: Modbus register map for 'big-endian' word order master devices

For reference: If the B3000 Totalizer = 12345678 hex
Register 40606 would contain 1234 hex (Word High)
Register 40607 would contain 5678 hex (Word Low)

Modbus Coil Description	Modbus Coil	Notes
Reset Running Totalizer	1	Forcing this coil ON will reset the running totalizer. After reset, the coil automatically returns to the OFF state.
Reset Grand Totalizer	2	Forcing this coil ON will reset both the running totalizer and the grand totalizer. After reset, the coil automatically returns to the OFF state.
—	3…8	Spares
Alarm Set point 1	9	0 = Set point OFF, 1 = Set point ON
Alarm Set point 2	10	0 = Set point OFF, 1 = Set point ON
—	11…16	Spares

Table 8: Modbus coil map

Opcode 01 – Read Coil Status

This opcode returns the state of the alarm coils. The following Coils are defined:

Coil #	Description
9	Alarm Set point 1
10	Alarm Set point 2
11 and up	Spare

Table 9: Read coil status

Command: <addr><01><00><08><00><02><crc-16>
Reply: <addr><01><01><0x><crc-16>

Opcode 03 – Read Holding Registers

This opcode returns the input holding registers, such as flow rate or totalizer.

NOTE: Each value must be requested individually. Return of a block of registers is not implemented at this time.

Example requesting flow rate in floating point format.

Command: <addr><03><00><C9><00><02><crc-16>
Reply: <addr><03><02><data><data><crc-16>

Opcode 05 – Force Single Coil

This opcode sets the state of a single coil (digital output). The following Coil Registers are defined:

Coil #	Description
1	Reset Totalizer
2	Grand Totals
3 and up	Spares

Table 10: Force single coil

The transition of coil from 0 to 1 will initiate function. This bit is auto reset to 0, so there is no need to set it to 0 after a totalizer reset command.

Command: <addr><05><00><00><FF><00><crc-16>
Reply: <addr><05><00><00><FF><00><crc-16>

SPECIFICATIONS

Display	Simultaneously shows Rate and Total; 5 x 7 Dot Matrix LCD, STN Fluid			
	B30A/B/S	6 Digit Rate, 0.5 inch (12.7 mm) numeric		
		7 Digit Total, 0.5 inch (12.7 mm) numeric		
		Engineering Unit Labels 0.34 inch (8.6 mm)		
	B30X/Z	6 Digit Rate, 0.37 inch (9.4 mm) numeric		
		7 Digit Total, 0.37 inch (13 mm) numeric		
		Engineering Unit Labels 0.24 inch (6.1 mm)		
	Annunciators	Alarm 1(), Alarm 2 (), Battery Level (), RS485 Communications (COM)		
Power	B30A/B/X/Z	Auto switching between internal battery and external loop power; B30A/Z includes isolation between loop power and other I/O		
		Battery	3.6V DC lithium "D Cell" gives up to 6 years of service life	
		Loop	4…20 mA, two wire, 25 mA limit, reverse polarity protected, 7V DC loop loss	
	B30S	Internal battery (3.6V DC Nicd) provides up to 30 days of power after 6…8 hours exposure of the integrated photovoltaic cell to direct sunlight		
Inputs	Magnetic Pickup	Frequency Range	1…3500 Hz	
		Frequency Measurement Accuracy	±0.1%	
		Over Voltage Protection	28V DC	
		Trigger Sensitivity	30 mVp-p (High) or 60 mVp-p (Low) - (selected by circuit board jumper)	
	Amplified Pulse	Direct connection to amplified signal (pre-amp output from sensor)		
Outputs	Analog 4…20 mA	4…20 mA, two-wire current loop; 25 mA current limit		
	Totalizing Pulse	One pulse for each Least Significant Digit (LSD) increment of the totalizer		
		Pulse Type (selected by circuit board jumper)	Opto-isolated (Iso) open collector transistor; Non-isolated open drain FE	
		Maximum Voltage	28V DC	
		Maximum Current Capacity	100 mA	
		Maximum Output Frequency	16 Hz	
		Pulse Width	30 mSec fixed	
	Status Alarms	B30A/Z	Open collector transistor; Adjustable flow rate with programmable dead band and phase.	
			Maximum Voltage	28V DC
			Maximum Current	100 mA
			Pullup Resistor	External required (2.2 k ohm min., 10 k ohm max.)
		B30B/S/X	None	
Modbus Digital Communications	B30A//Z	Modbus RTU over RS485, 127 addressable units / 2-wire network, 9600 baud, long integer and single precision IEEE754 formats; retrieve: flow rate, job totalizer, grand totalizer, alarm status and battery level; write: reset job totalizer, reset grand totalizer		
	B30B/S/X	None		
Data Configuration and Protection	B30A/B/X/Z	Two four-digit user selectable passwords; level one password enables job total reset only, level two password enables all configuration and totalizer reset functions		

Certifications	Safety	B30A/B/S	Class I Division 1, Groups C, D; Class II, Division 1 Groups E, F, G; Class III for US and Canada. Complies with UL 913 and CSA C22.2 No. 157-92			
		B30X/Z	Class I Division 1 Groups B, C, D; Class II, Division 1, Groups E, F, G; Class III for US and Canada Complies with UL 1203 and CSA C22.2 No. 30-M1986 ATEX II 2 G Ex d IIC T4 Gb and ATEX II D Ex tb IIIC T135 °C Db Complies with Directive 2014/34/EU and S.I. 2016/1107		
	Entity Parameters	B30A/B	4…20 mA Loop: Vmax = 28V DC	Imax = 26 mA	Ci = 0.5 µF	Li = 0 mH
		B30A/B/S	Pulse Output: Vmax = 28V DC	Imax = 100 mA	Ci = 0 µF	Li = 0 mH
		B30A/B/S	Reset Input: Vmax = 5V DC	Imax = 5 mA	Ci = 0 µF	Li = 0 mH
		B30A	RS485: Vmax = 10V DC	Imax = 60 mA	Ci = 0 µF	Li = 0 mH
		B30A/B/S	Turbine Input: Voc = 2.5V	Isc = 1.8 mA	Ca = 1.5 µF	La = 1.65 H
	EMC	2004/108/EC and S.I. 2016/1091				
Measurement Accuracy	0.05%					
Response Time (Damping)	1…100 seconds response to a step change input, user adjustable					
Environmental Limits	–22…158° F (–30…70° C); 0…90% humidity, non-condensing;					
Materials and Enclosure Ratings	B30A/B/S	Polycarbonate, stainless steel, polyurethane, thermoplastic elastomer, acrylic; NEMA 4X/IP 66				
	B30X/Z	Copper free, epoxy-coated, aluminum, buna seal, NEMA 4X/IP66				
Engineering Units	Liquid	Gallons, liters, oil barrels (42 gallon), liquid barrels (31.5 Gallon), cubic meters, million gallons, cubic feet, million liters, acre feet				
	Gas	Cubic feet, thousand cubic feet, million cubic feet, standard cubic feet, actual cubic feet, normal cubic meters, actual cubic meters, liters				
	Rate Time	Seconds, minutes, hours, days				
	Totalizer Exponents	0.00, 0.0, X1, x10, x100, x1000				
	K-factor Units	Pulses/gallon, pulse/cubic meter, pulses/liter, pulses/cubic foot				

PART NUMBER CONSTRUCTION

				-	
Model					
Blancett B3000 Display	**B30**				
Model					
Base		**B**			
Advanced		**A**			
Solar		**S**			
Base – Explosion Proof* – Battery & Loop Power		**X**			
Advanced – Explosion Proof* – Battery & Loop Power		**Z**			
Mounting					
Meter			**M**		
Remote			**R**		
Swivel			**S**		
Units of Measure					
Customer Selectable					**CS**

*For hazardous locations the monitor must be installed on an Explosion-proof rated meter. To maintain compliance, optional kit P/N B280-737 for meter mounting is required.

DIMENSIONS

Meter Mount

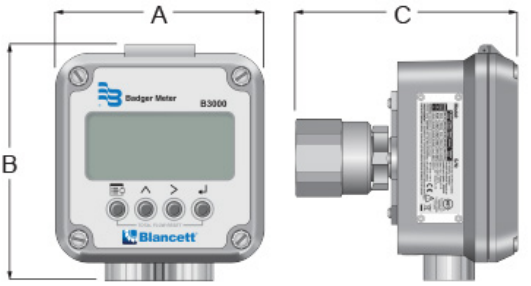

A	B	C
4.50 in. (114.3 mm)	5.08 in. (129.0 mm)	4.78 in. (121.4 mm)

Remote Mount

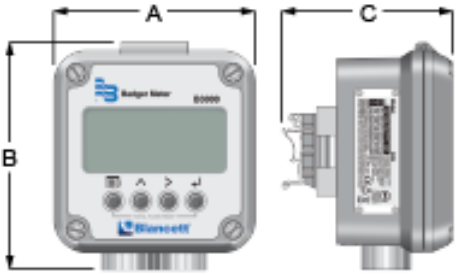

A	B	C
4.50 in. (114.3 mm)	5.08 in. (129.0 mm)	3.80 in. (96.5 mm)

Explosion-proof

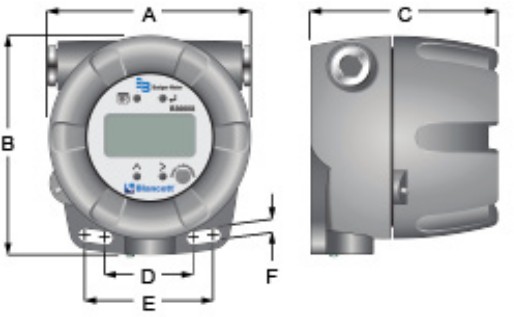

A	B	C	D	E	F
5.25 in. (133.4 mm)	5.65 in. (143.5 mm)	4.86 in. (123.4 mm)	2.25 in. (57.1 mm)	3.35 in. (85.1 mm)	0.33 in. (8.4 mm)

Swivel Mount

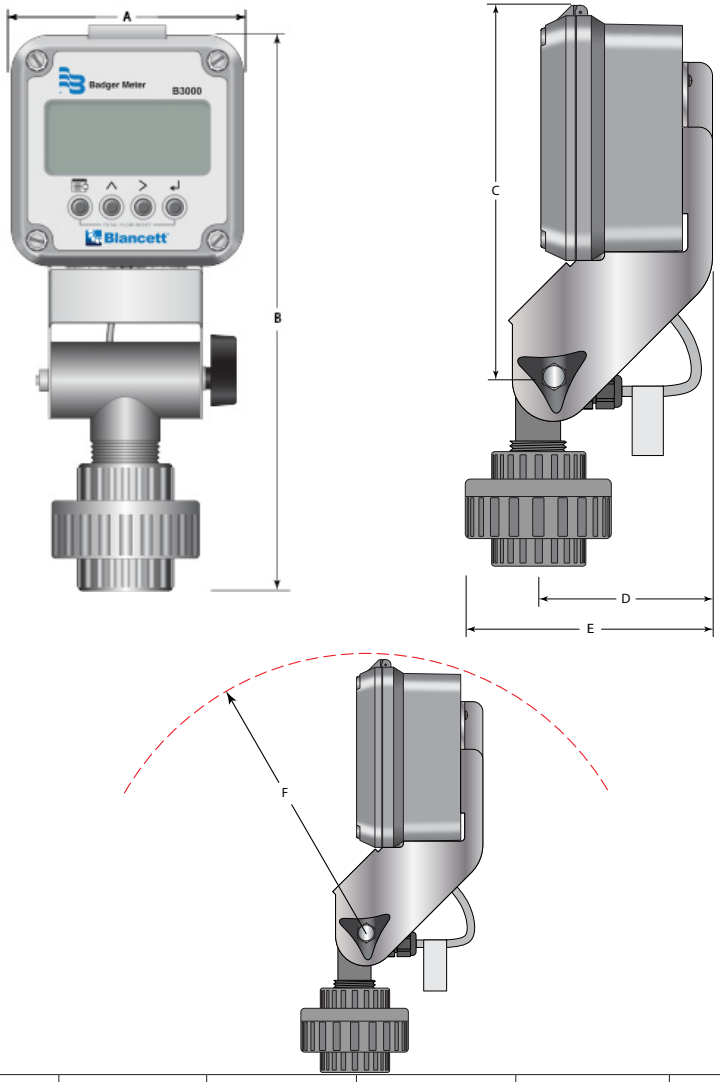

A	B	C	D	E	F
4.50 in. (114.3 mm)	10.9 in. (276.9 mm)	6.90 in. (175.4 mm)	3.21 in. (81.5 mm)	4.25 in. (107.9 mm)	7.00 in. (177.8 mm)

Control. Manage. Optimize.

Blancett is a registered trademark of Badger Meter, In. Other trademarks appearing in this document are the property of their respective entities. Due to continuous research, product improvements and enhancements, Badger Meter reserves the right to change product or system specifications without notice, except to the extent an outstanding contractual obligation exists. © 2021 Badger Meter, Inc. All rights reserved.

www.badgermeter.com